Conext™ CL36 PV Inverter

Owner's Guide

975-0811-01-01 Rev A
01-2019

CL36

http://solar.schneider-electric.com

Schneider Electric

Conext™ CL36 PV Inverter

Owner's Guide

http://solar.schneider-electric.com

Schneider Electric

Copyright © 2019 Schneider Electric. All Rights Reserved. All trademarks are owned by Schneider Electric Industries SAS or its affiliated companies. Other 3rd party trademarks are owned by their respective companies.

Exclusion for Documentation

UNLESS SPECIFICALLY AGREED TO IN WRITING, SELLER

(A) MAKES NO WARRANTY AS TO THE ACCURACY, SUFFICIENCY OR SUITABILITY OF ANY TECHNICAL OR OTHER INFORMATION PROVIDED IN ITS MANUALS OR OTHER DOCUMENTATION;

(B) ASSUMES NO RESPONSIBILITY OR LIABILITY FOR LOSSES, DAMAGES, COSTS OR EXPENSES, WHETHER SPECIAL, DIRECT, INDIRECT, CONSEQUENTIAL OR INCIDENTAL, WHICH MIGHT ARISE OUT OF THE USE OF SUCH INFORMATION. THE USE OF ANY SUCH INFORMATION WILL BE ENTIRELY AT THE USER'S RISK; AND

(C) REMINDS YOU THAT IF THIS MANUAL IS IN ANY LANGUAGE OTHER THAN ENGLISH, ALTHOUGH STEPS HAVE BEEN TAKEN TO MAINTAIN THE ACCURACY OF THE TRANSLATION, THE ACCURACY CANNOT BE GUARANTEED. APPROVED CONTENT IS CONTAINED WITH THE ENGLISH LANGUAGE VERSION WHICH IS POSTED AT SOLAR.SCHNEIDER-ELECTRIC.COM.

Document Number: 975-0811-01-01 **Revision:** Rev A **Date:** 01-2019

Product Part Numbers: PVSCL36E (CL36)

Contact Information: http://solar.schneider-electric.com

Please contact your local Schneider Electric Sales Representative or visit our website at:
http://solar.schneider-electric.com/tech-support/

About This Guide

Purpose

The purpose of this Owner's Guide is to explain the procedures for operating, configuring, maintaining, and troubleshooting the Conext CL36 PV Inverter.

Scope

The Guide provides safety guidelines and general information for installing and operating the Conext CL36, as well as information about configuring, monitoring, and troubleshooting the unit. It does not include information on how to use other Schneider Electric and third-party products.

Audience

The Guide is intended for use by anyone who plans to design, construct, install, or operate a system involving the CL36. The installation information in this guide is intended for qualified personnel. Qualified personnel have training, knowledge, and experience in:

- Installing electrical equipment and PV power systems (up to 1100 volts)
- Applying all applicable installation codes
- Analyzing and reducing the hazards involved in performing electrical work
- Selecting and using Personal Protective Equipment (PPE)

Organization

This Guide is organized into:

Chapter 1, “Introduction”

Chapter 2, “Installation”

Chapter 3, “Electrical Connections”

Chapter 4, “Commissioning”

Chapter 5, “LCD Display Operation”

Chapter 6, “Troubleshooting”

Chapter 7, “Disconnecting, Dismantling, and Disposing the CL36”

Chapter 8, “Specifications”

Abbreviations and Acronyms

EMI	Electromagnetic Interference
G	Ground (also referred as Protective Earth)
GND	Ground (also referred as Protective Earth)
HMI	Human-Machine Interface
IGBT	Insulated Gate Bipolar Transistor
LAN / WAN	Local Area Network / Wide Area Network
LCD	Liquid Crystal Display (used for HMI displays)
LED	Light Emitting Diode (used for indicator lights)
NFPA	National Fire Protection Association
PE	Protective Earth (also referred as Ground)
PPE	Personal Protective Equipment
PV	Photovoltaic (or Solar)
SPD	Surge Protection Device

Related Information

You can find more information about Schneider Electric Solar, as well as its products and services at http://solar.schneider-electric.com.

Important Safety Instructions

READ AND SAVE THESE INSTRUCTIONS - DO NOT DISCARD

This document contains important safety instructions that must be followed during installation procedures (if applicable). **Read and keep this Owner's Guide for future reference.**

Read these instructions carefully and look at the equipment (if applicable) to become familiar with the device before trying to install, operate, service or maintain it. The following special messages may appear throughout this bulletin or on the equipment to warn of potential hazards or to call attention to information that clarifies or simplifies a procedure.

Please Note

Electrical equipment must be installed, operated, serviced, and maintained only by qualified personnel. No responsibility is assumed by Schneider Electric Solar for any consequences arising out of the use of this material.

A qualified person is one who has skills and knowledge related to the construction, installation, and operation of electrical equipment and has received safety training to recognize and avoid the hazards involved.

Safety Information

1. **Before using this product, read all instructions and cautionary markings on the unit and all appropriate sections of this manual.**
2. Use of accessories not recommended or sold by the manufacturer may result in a risk of fire, electric shock, or injury to persons.
3. The manufacturer recommends that all wiring be done by a certified technician or electrician to ensure adherence to the local and national electrical codes applicable in your jurisdiction.
4. To avoid a risk of fire and electric shock, make sure that existing wiring is in good condition and that wire is not undersized. Do not operate the equipment with damaged or substandard wiring.
5. Do not operate the equipment if it has been damaged in any way.
6. Do not disassemble the Conext CL36 except where noted for connecting wiring and cabling. See your warranty for instructions on obtaining service. Attempting to service the unit yourself may result in a risk of electrical shock or fire.
7. To reduce the risk of electrical shock, disconnect the power supply from the equipment before attempting installation, and any maintenance (including cleaning or working on any components connected to the equipment). Internal capacitors remain charged for ten minutes after all power is disconnected.
8. The equipment must be grounded. Use the protective grounding conductor provided with the AC input conductors.
9. This product is designed for outdoor use and is rated IP65 and Type 4X.
10. To reduce the chance of short-circuits, always use insulated tools when installing or working with this equipment. Do not leave tools inside.
11. Remove personal metal items such as rings, bracelets, necklaces, and watches when working with electrical equipment.
12. Do not open nor disassemble the top half of the unit. There are no user-serviceable parts inside.
13. To disconnect the unit from DC power, turn the DC switch to OFF and then remove all PV string connectors from the DC terminals.

⚠⚠ DANGER

ELECTRIC SHOCK, EXPLOSION, OR ARC FLASH HAZARDS

- Apply appropriate personal protective equipment (PPE) and follow safe electrical work practices. See NFPA 70E or CSA Z462.
- This equipment must only be installed and serviced by qualified electrical personnel.
- The inverter is energized from multiple sources. Before removing covers identify all source, de-energize, lock-out, and tag-out and wait 10 minutes.
- Do not open a fuse holder under load. The fuse must be de-energized by disconnecting PV cables before servicing.
- Never energize the inverter with the covers removed.
- Always use a properly rated voltage sensing device to confirm all circuits are de-energized.
- Replace all devices and covers before turning on power to this equipment.
- The DC conductors of this photovoltaic system are ungrounded and may be energized.

Failure to follow these instructions will result in death or serious injury.

Access to live parts shall be limited to suitably qualified electrical personnel. See installation instructions before connecting to the supply.

NOTICE

EQUIPMENT DAMAGE

- All cables connected to the CL36 must run through the cable glands on the unit.
- This unit is susceptible to damage from EMI and nearby lightning strikes unless a surge protection device (a lightning arrestor) is installed.
- Turn Off all devices before connecting cables.
- Use the CL36's DC switch as its On/Off switch.
- To isolate the CL36, see "Lock-Out Tag-Out (LOTO) Procedure" on page xi.

Failure to follow these instructions can damage equipment or affect network performance.

Storage Information

Store the inverter properly when the inverter is not to be installed immediately.

1. Inverter must be packed inside its original carton with the desiccant bags inside.
2. Store the inverter with its front panel facing up. The carton should lay flat and parallel to the ground.
3. Seal the carton with standard packaging tape.
4. Store the inverter in a dry and clean place to protect it against dust and moisture.
5. Temperature: -40 to 70 °C
   Relative humidity: 0 to 100%.
6. Keep the inverter away from chemically corrosive materials.
7. Periodically check for any visible damages to the carton and inspect the inverter right away if the carton shows signs of penetration during the storage period. Replace the carton, if necessary.

NOTE: A thorough and professional inspection may be required before installing the inverter after more than six months in storage. Contact a local Schneider Electric Solar sales representative for information on how to arrange the inspection.

IMPORTANT: Storage beyond two years voids the warranty.

Lock-Out Tag-Out (LOTO) Procedure

Lock-out refers to the practice of preventing de-energized circuits from being re-energized by putting locks on the disconnecting devices, holding them open. Tag-out refers to the practice of attaching a tag to the disconnect-device locks warning others not to operate the disconnect device and containing information relating to the lock-out, such as the person responsible, the reason, and the date and time. Combined these two practices are called the lock-out and tag-out (LOTO) procedure.

1. Identify any disconnect device upstream from the CL36 unit.
2. Open the disconnect device that connects to the CL36 to cut off DC power.
3. Turn the CL36's DC Switch to OFF position.
4. Lock-out and tag out the external DC disconnect device.
5. Remove all PV string connectors from the DC terminals.
6. Identify the AC Panel Breaker downstream from the CL36 unit.
7. Open the AC Panel door.
8. Turn Off the AC Panel Breaker (open the switch) that connects to the CL36 to cut off AC power.
9. Close the AC Panel door.
10. Lock-out and tag out the AC Panel.
11. Wait ten minutes for the circuits in the CL36 to discharge.
12. Check that the inverter is in zero energy state before performing work.
13. Open the CL36 enclosure and commence service and maintenance activities.

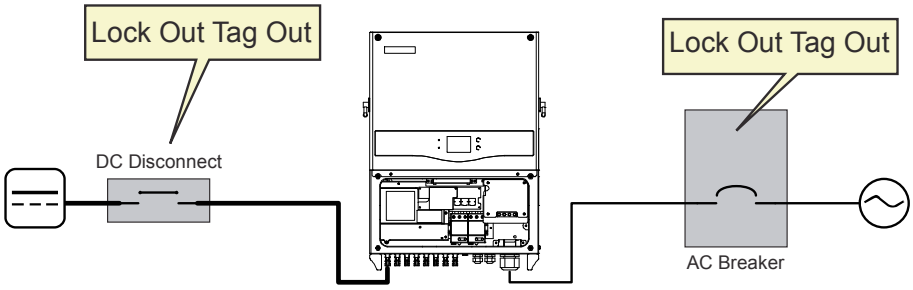

•THIS PAGE INTENTIONALLY BLANK•

Contents

Important Safety Instructions

Safety Information ---- viii
Storage Information ---- x
Lock-Out Tag-Out (LOTO) Procedure ---- xi

1 Introduction

Conext CL36 ---- 1–2
Physical Features ---- 1–4
Dimensions ---- 1–5
Inverter Dimensions ---- 1–5
Packaging Box Dimensions ---- 1–5
Product Label ---- 1–6
LCD Display ---- 1–7
DC Switch ---- 1–8
Technical Features ---- 1–9
CL36 Circuit Diagram ---- 1–9
Standard Features ---- 1–10
Derating Feature ---- 1–11

2 Installation

Pre-Installation ---- 2–2
Planning the Installation ---- 2–2
Installation ---- 2–3
What's In The Box ---- 2–3
Material and Tools ---- 2–4
Location Information ---- 2–4
Install and Mount the CL36 ---- 2–8
Torque Values ---- 2–11

3 Electrical Connections

Precautions ---- 3–2
Planning the Electrical Connections ---- 3–2
Cabling and Wiring ---- 3–3
Material and Tools ---- 3–3
Terminal and Cable Entry Points ---- 3–5
AC Side Cable Connection ---- 3–6
AC Side Requirements ---- 3–6
AC Circuit Breaker ---- 3–6
Residual Current Device ---- 3–6
Multiple Inverters in Parallel Connection ---- 3–7

Grid Connection - - - 3–9
PV Array Connection - - - 3–14
PV Input Configuration - - - 3–14
PV Input Connection - - - 3–16
Grounding the Inverter - - - 3–20
Grounding System Overview - - - 3–20
Second Protective Earth Terminal - - - 3–21
Communication Connection - - - 3–22
Overview - - - 3–22
RS-485 Communication System - - - 3–23

4 Commissioning

Inspection Before Commissioning - - - 4–2
Commissioning Procedure - - - 4–2

5 LCD Display Operation

Description of the Selection Buttons - - - 5–2
Menu Tree - - - 5–3
Main Screen - - - 5–4
Contrast Adjustment - - - 5–6
Checking Running Information - - - 5–6
Checking History Information - - - 5–8
Checking Running Records - - - 5–8
Checking Fault (Event) Records - - - 5–9
Checking History Event Records - - - 5–9
Checking Energy Records - - - 5–10
Starting/Stopping - - - 5–11
Password Entry - - - 5–12
System Parameter Setting - - - 5–13
Language Setting - - - 5–13
Time Setting - - - 5–14
Total Energy Deviation Adjustment - - - 5–15
Load Default (Factory Reset) - - - 5–16
Checking Firmware Version - - - 5–16
Running Parameter Setting - - - 5–17
Main Screen of Run-param - - - 5–17
Active/Reactive Power Parameters - - - 5–21
Reactive Power Regulation - - - 5–21
Pf Mode - - - 5–22
Qt Mode - - - 5–22
Off Mode - - - 5–22
Q(P) Mode (when the country selection is not “IT”) - - - 5–22
Q(U) Mode (when the country selection is not “IT”) - - - 5–23
Reactive Power Setting for Italy - - - 5–25

Italy Q(P) Mode - - - 5–25
Italy Q(U) Mode - - - 5–26
Save P/Q-set - - - 5–28
Time Parameters - - - 5–28
Derating Parameters - - - 5–29
ISO Parameters - - - 5–29
LVRT Parameter - - - 5–30
HVRT Parameter - - - 5–30
Protection Parameter Setting - - - 5–31
Country Setting - - - 5–31
Single-stage Protection Parameter Setting - - - 5–33
Multi-stage Protection Parameter Setting - - - 5–34
Protection Recovery Setting - - - 5–35
Protection Parameter Confirmation - - - 5–35
Communication Parameter Setting - - - 5–36
Advanced Setting Parameter Setting - - - 5–37

6 Troubleshooting

Troubleshooting - - - 6–2
LED Indicator - - - 6–3
LCD Screen - - - 6–4
Maintenance - - - 6–10
Routine Maintenance - - - 6–10
Maintenance Instructions - - - 6–11
Fan Maintenance - - - 6–11
Replacing the Fuse - - - 6–13
Replacing an Expended DC SPD - - - 6–14
Cleaning the Air Inlet and Outlet - - - 6–15

7 Disconnecting, Dismantling, and Disposing the CL36

Disconnecting the CL36 - - - 7–2
Dismantling the CL36 - - - 7–4
Disposing the CL36 - - - 7–5

8 Specifications

Product Specifications - - - 8–2

1 Introduction

Chapter 1 contains general information about:

- Conext CL36
- Physical Features
- Technical Features

Conext CL36

The Conext CL36 (also referred to as CL36 PV Inverter) is a transformerless three-phase PV string inverter that is designed to be an integral part of any utility grid-connected PV Power System.

The Conext CL36 is designed to convert DC power generated from the PV array into AC power that is compatible with utility grade AC power. The following diagram illustrates its fundamental application.

⚠ WARNING

ELECTRICAL SHOCK HAZARD

- Do not connect the inverter to a PV string where the positive and negative terminals of the PV strings need to be grounded.
- Do not connect any local load between the inverter and the AC circuit breaker.
- Use the inverter ONLY in a grid-connected PV system.

Failure to follow these instructions can result in death or serious injury.

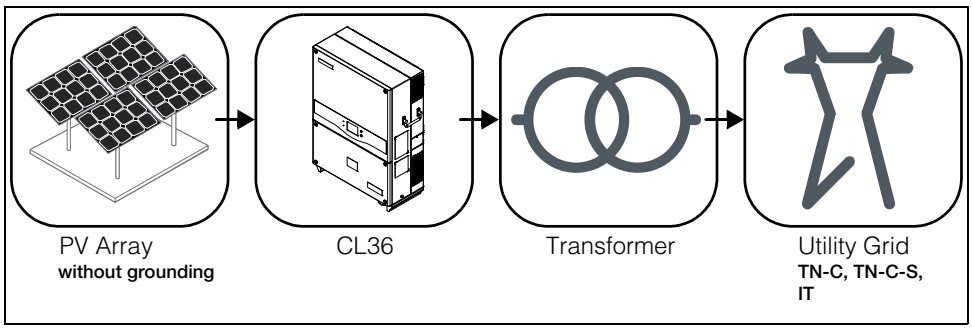

Figure 1-1 Fundamental Application

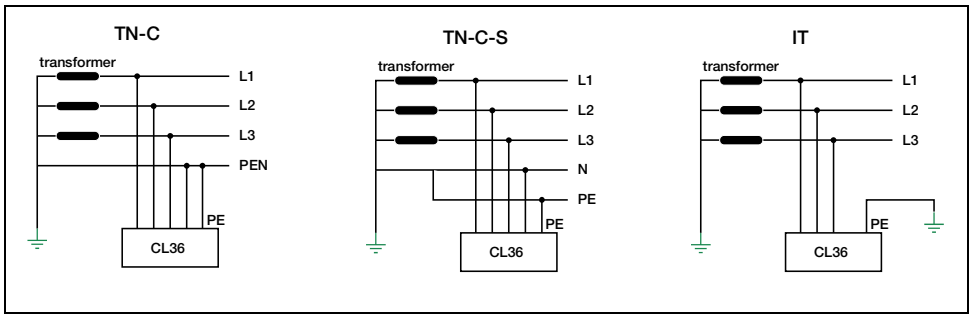

Figure 1-2 Type of Grid Connections

Grid Connection Conditions

More than one CL36 PV Inverter can be connected to the PV system if the total capacity of the PV system (PV array) exceeds the capacity of a single inverter. Each inverter in the multiple setup connects individually to a PV string at the inverter's DC input side. Then the inverter's AC output side connects to the AC mains (the grid).

NOTICE

EQUIPMENT DAMAGE

Follow local regulations when installing a connection to a **TN** system. An additional external Type B RCD (residual current detection) device rated 300 mA continuous may be required and combined with additional automatic disconnect devices.

Failure to follow these instructions can result in equipment damage.

Physical Features

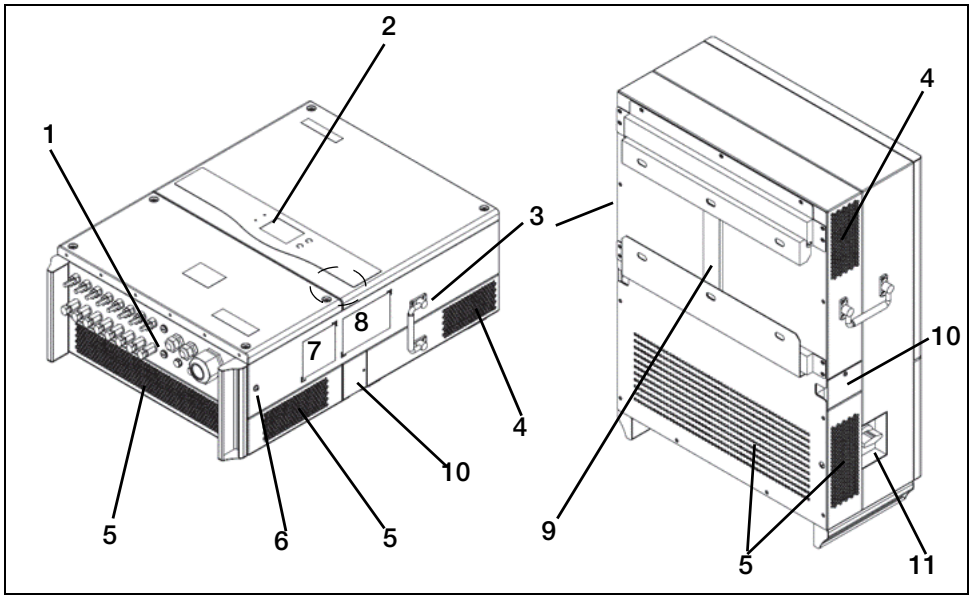

Figure 1-3 CL36 Components

Item	Description
1	**Electrical connection area** includes the DC terminals, AC terminals, and RS-485 communication terminals.
2	**LCD Display** is the main HMI for viewing operational information and changing parameter values for settings.
3	**Handles** are used for moving, handling, and mounting the PV Inverter.
4	**Hot air exhaust**
5	**Ambient air inlet**
6	**PE second terminal**
7	**Danger label**
8	**Rating label**
9	**Backplate** is used to hang the PV Inverter onto the wall.
10	**Four fans** to perform controlled forced-air cooling.
11	**DC switch**

Dimensions

Inverter Dimensions

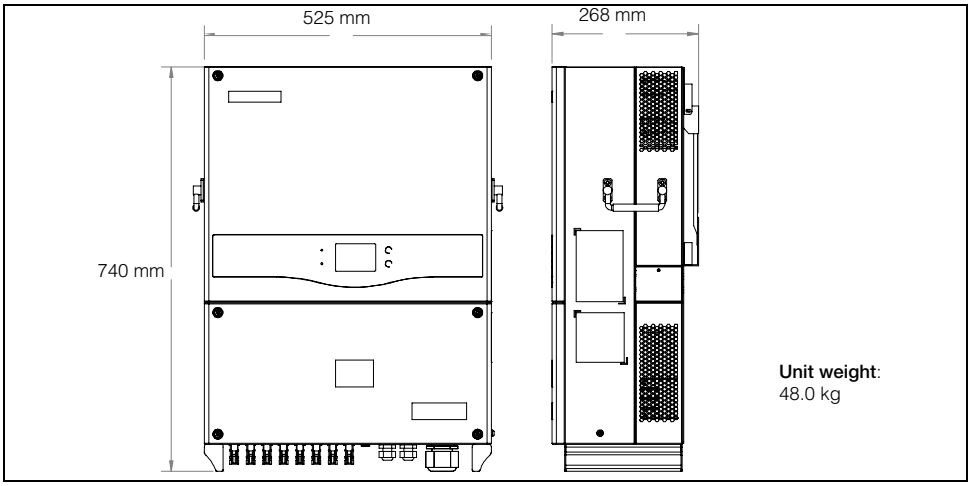

Figure 1-4 Conext CL36 Dimensions

Packaging Box Dimensions

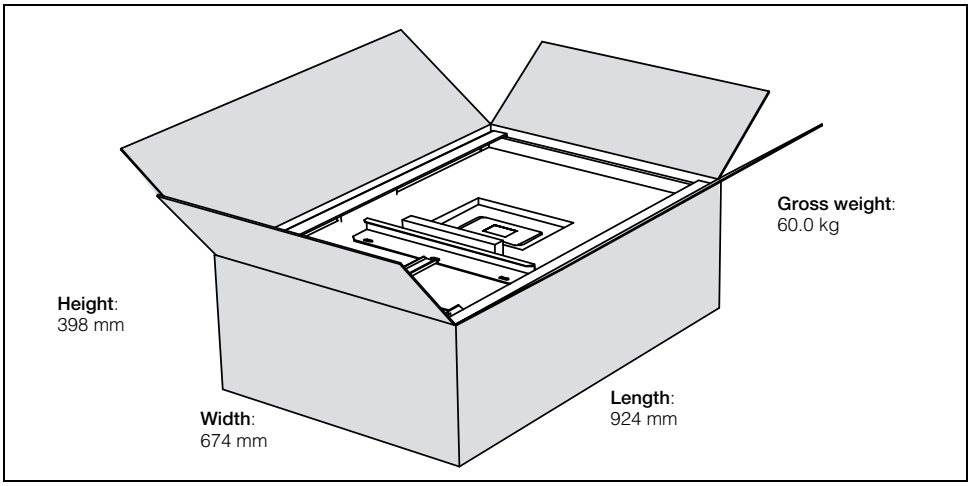

Figure 1-5 Conext CL36 Packaging Box Dimensions

Product Label

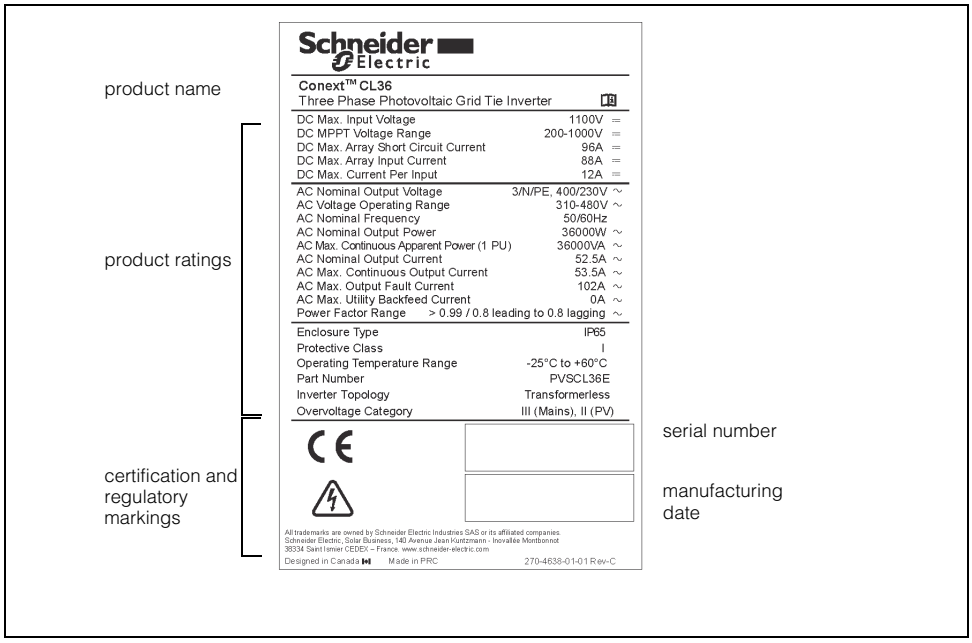

Figure 1-6 Example of a Conext CL36 Product Label

LCD Display

The LCD Display is the main interface of the CL36 PV Inverter. It is made up of two LED indicators, two buttons, and the screen itself.

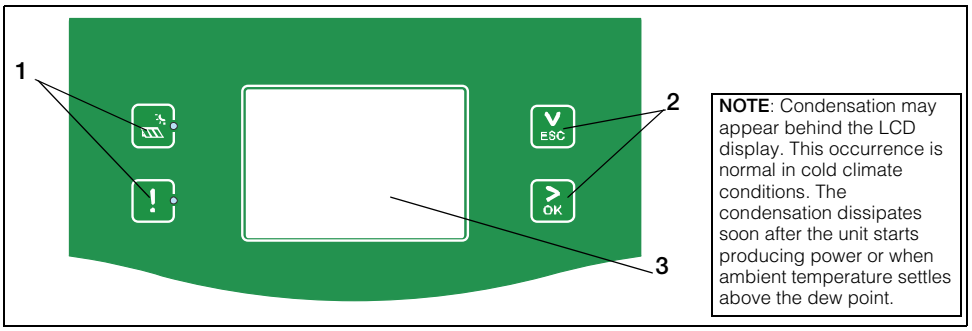

Figure 1-7 LCD Display

Item	Description
1	**LED Indicators** – **RUN** and **ALERT** . Indicates the present operational state of the PV Inverter.
2	**Selection Buttons** – **ESC (and down)** and **OK (and next)** . Use for navigating the LCD interface, selecting settings, and changing parameters of settings.
3	**LCD Screen**. Displays the present state of the PV Inverter, operational and alarm information, and present settings.

Table 1-1 Description of LED Indicators

LED Indicators	Description
RUN - On	The PV Inverter is operating and feeding AC power to the utility grid.
ALERT - Off	
RUN - Off	A ground fault (or any event) is detected or a protection feature is enabled.
ALERT - On	
RUN - Off	The PV inverter is not in operation or a communication event is detected between the DSP and the LCD Display or sufficient PV energy is not available.
ALERT - Off	
RUN - flashing	The PV Inverter is communicating a warning.
ALERT - Off	

DC Switch

The DC Switch is both the main power switch and a protective component which is used to safely disconnect DC power between the PV array and the PV Inverter whenever necessary to do so.

The PV Inverter operates automatically (without the need of switching On or Off) when DC input and AC output requirements are continuously met. Turn the DC switch to the Off position only to stop PV Inverter operation when a ground fault condition is detected or when there is a non-ground fault condition to stop inverter operation such as maintenance and servicing.

⚠ WARNING

ELECTRIC SHOCK HAZARD

- Do not perform maintenance and servicing without totally disconnecting the DC source from the inverter. The DC switch does not de-energize the DC fuse circuits. The fuse circuits remain live even if the DC switch is turned to the Off position.
- To remove power to the inverter, disconnect power from the PV disconnect device. See “Lock-Out Tag-Out (LOTO) Procedure” on page xi.
- Alternatively, to remove power to the inverter, open all MC4 type connectors after ensuring that no current is flowing and by using a special tool for disconnection.

Failure to follow these instructions can result in death or serious injury.

Technical Features

CL36 Circuit Diagram

Figure 1-8 shows the main circuit of the PV Inverter.

Maximum Power Point Tracking (MPPT) is utilized to optimize harvesting DC power from the PV array with different PV input conditions.

The PV Inverter circuit converts DC power into AC power and feeds it to the utility grid through the inverter's AC terminal. The protection circuit is equipped to ensure the device's safe operation and personal safety.

The DC switch is used to disconnect DC power from the PV Array safely.

The inverter provides standard RS-485 ports for communication.

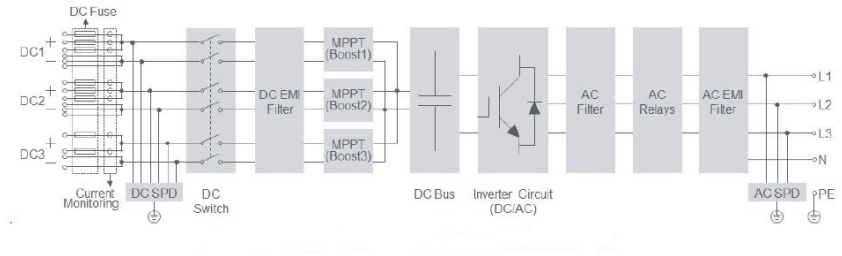

CL36 Wiring Box contents

- DC switch
- 8 inputs (3+3+2 PV strings)
- 15A fuses in pos(+) polarity
- type 2 DC and AC SPD
- string current monitoring

Figure 1-8 Conext CL36 Circuit Diagram

Standard Features

Inverter Function The device's main function is to convert DC current into grid-compatible AC current then feed this current into the grid.

Data Storage and LCD Display The onboard memory stores information such as fault detection and displays them on the screen of the integrated LCD Display.

Device Configuration The LCD Display provides the main interface for accessing device settings and changing them for optimal operation of the inverter.

Communication Interface Features an RS-485 port which can be connected with an external monitoring and control gateway,

Protection Features The unit is equipped with the following features for preventing inverter damage, other equipment damage, and personal injury hazards.

- Short-circuit protection
- Ground insulation resistance detection
- Inverter output voltage monitoring
- Inverter output frequency detection
- Residual current protection
- DC injection of AC output current surveillance
- Anti-islanding protection
- Ambient temperature monitoring
- DC over-voltage protection
- Over-current protection
- Power module over-temperature protection
- Fan failure protection

Derating Feature

Output derating is a way to protect the inverter from overload or potential fault detections. These situations prompt the PV Inverter to initiate power derating:

- Altitude higher than 3000 meters
- Internal temperature is too high (including ambient temperature and internal components temperature)

  NOTE: For example, installing the inverter in an enclosed space may hasten derating.

- Grid voltage is too low
- External power class adjustment
- Grid frequency is too high (see NOTE)

  NOTE: Valid only when the country selected is DE or IT.

- High grid voltage with a simultaneous low PV voltage.

Power Limit Setting Inverter output power can be adjusted via the LCD Display or a remote grid dispatch from the utility company. The corresponding operating state will be displayed on the LCD screen.

Over-temperature Derating High ambient temperature, a blocked fan, or poor ventilation will initiate inverter power derating.

When the temperature inside the unit exceeds the upper limit, the inverter will derate its power output until the internal temperature drops within the allowable range.

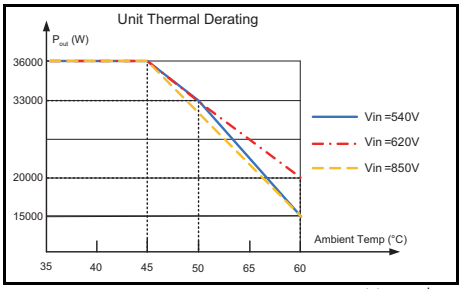

not to scale

NOTE: If both the module and internal temperatures reach power derating conditions, the inverter will derate the power output based on the lower temperature between the two.

Figure 1-9 Over-Temperature Derating

Grid Under-voltage Derating When grid voltage is lower than 400 V, the inverter will derate the output power to make sure the output current is within the allowable range. Once the grid voltage is greater than 400 V, the inverter will deliver its rated output power.

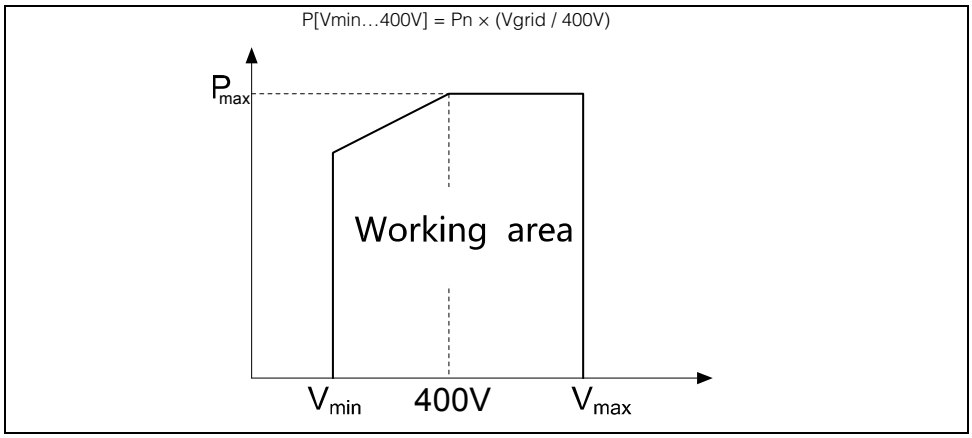

Figure 1-10 Grid Under-Voltage Derating

PV Over-voltage Derating The inverter regularly scans the PV voltage every 25 minutes and forces the PV to derate to test whether the maximum power point is less than 860 volts.

At 36 KVA, if the maximum power point is higher than 860 volts, then the inverter will return to the higher voltage limit before it starts derating.

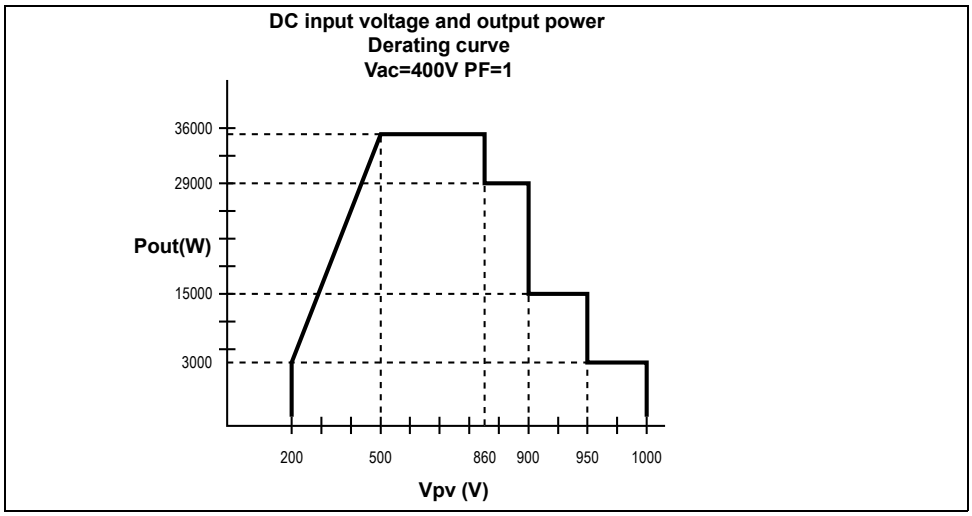

Figure 1-11 PV Over-Voltage Derating

2 Installation

Chapter 2 contains information about:

- Pre-Installation
- Installation

Pre-Installation

Before installing the Conext CL36, read all instructions and cautionary markings in this Guide.

NOTE: Obtain all necessary permits prior to starting the installation. **Installations must meet all local codes and standards.** Installation of this equipment should only be performed by skilled personnel such as qualified electricians and Certified Renewable Energy (RE) System installers.

Planning the Installation

- Read this entire chapter before beginning the installation. It is important to plan the installation from beginning to end.
- Assemble all tools and materials needed for the installation.

Installation

DANGER

ELECTRIC SHOCK AND FIRE HAZARD

- Do not connect the PV Inverter to a live power source prior to cabling and wiring found in Chapter 3, “Electrical Connections”. The inverter can be energized from two sources namely, DC from the PV array and AC from the grid.
- Do not connect any powered device to the PV Inverter during installation.

Failure to follow these instructions will result in death or serious injury.

What’s In The Box

The following materials are supplied in the Conext CL36 package:

First Row

- **A** CL36 unit
- **B** Wall-mounting backplate
- **C** CL36 Quick Install Guide, Quality Certificate, and Product Test Report

Second Row

- **D** Metal frame M10x45 fasteners (6x)
- **E** M4x16 backplate screws (2x)
- **F** MC4 DC cable connectors (8x pairs) for the CL36
- **G** MC4 cable gland (8x pairs)

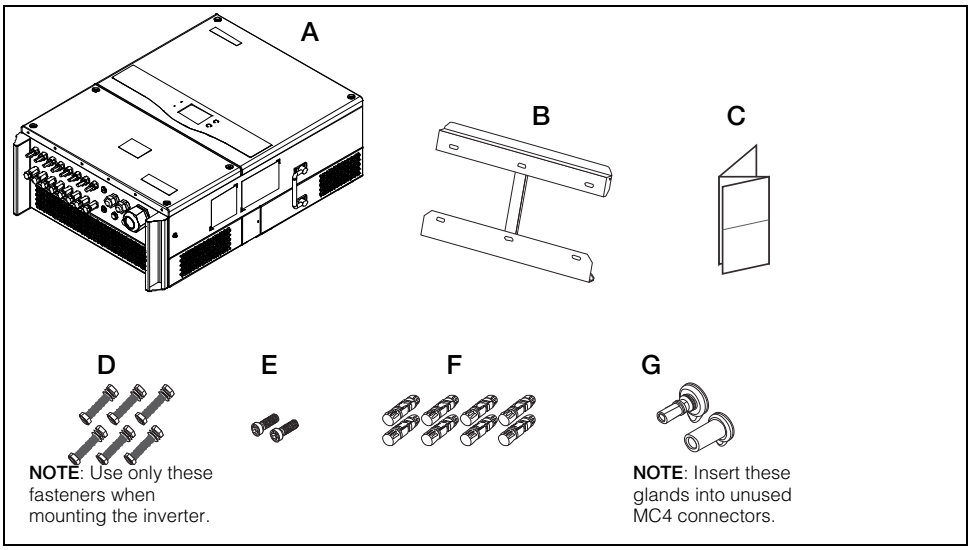

Figure 2-1 What’s In the Box

Material and Tools

The following materials and tools are not supplied but are required to complete the installation:

- AC power cable (5-wire)
- DC power cables (red+, black-)
- Shielded RS-485 cable
- Wire stripper, standard molex crimper, AC/DC crimp pins
- Screwdriver and drill set (powered and/or manual)
- Calibrated professional digital multimeter
- Crimping tool from Multi-contact (http://ec.staubli.com/)
- #2 Phillips screwdrivers or power screwdriver for mounting the bracket
- Slotted screw driver
- Stripper and crimping tool for both AC and DC wiring
- Bubble level or Spirit level to ensure the straight installation of the mounting bracket
- Torque adjustable wrench
- Torx head screw driver T25

Location Information

⚠ DANGER

ELECTRIC SHOCK, EXPLOSION, OR ARC FLASH HAZARDS

- Apply appropriate personal protective equipment (PPE) and follow safe electrical work practices.
- This equipment must only be installed and serviced by qualified electrical personnel.
- Never energize the inverter with the covers removed.
- Do not open a fuse under load. The fuse must be de-energized from all sources before servicing.
- The inverter is energized from multiple sources. Before removing covers identify all source, de-energize, lock-out, and tag-out and wait 10 minutes. See “Lock-Out Tag-Out (LOTO) Procedure” on page xi.
- Always use a properly rated voltage sensing device to confirm all circuits are de-energized.
- Replace all devices and covers before turning on power to this equipment.
- The DC conductors of this photovoltaic system are ungrounded and may be energized.

Failure to follow these instructions will result in death or serious injury.

Environment

The CL36 is IP65 rated. It is suitable for outside installation.

The ambient temperature should be within the range of –25 to 60 °C to prevent automatic power derating in over-temperature conditions. Relative humidity at the installation site can be from 0 to 100%.

Allow for at least 600 mm clearance on all sides of the inverter. When installing another inverter next to it (or several inverters around it), increase the clearance between inverters from all sides to 800 mm.

See Figure 2-2, “Clearances and Ambient Temperature” on page 2–5.

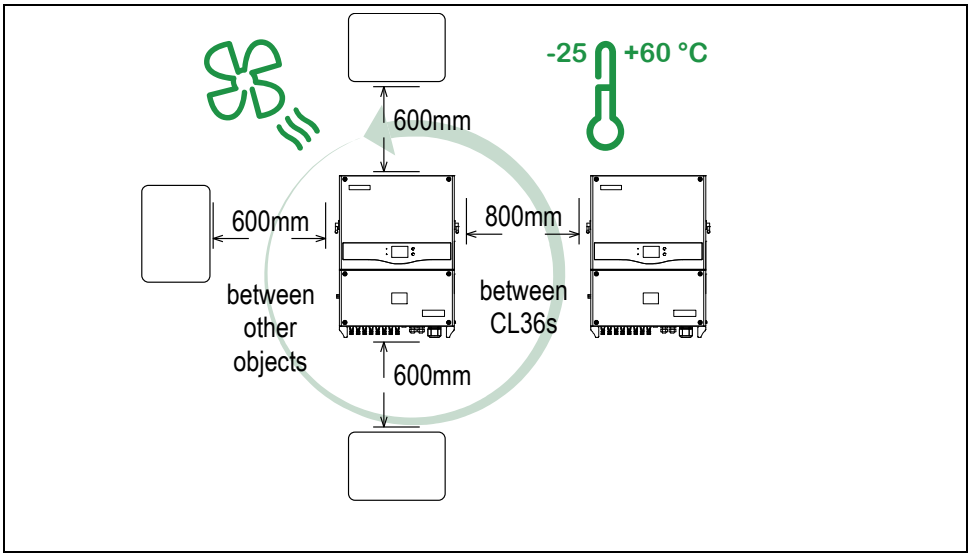

Figure 2-2 Clearances and Ambient Temperature

Fire Safety

⚠ WARNING

IGNITION AND FIRE HAZARD

- This equipment is not ignition protected. To prevent fire or explosion, do not install this product in locations that require ignition-protected equipment. This includes any confined space containing lead acid batteries, or flammable chemicals such as, natural gas (NG), liquid petroleum gas (LPG) or gasoline (Benzine/Petrol).
- Do not install in a confined space with machinery powered by flammable chemicals, or storage tanks, fittings, or other connections between components of fuel or flammable chemical systems.
- Do not install the CL36 on a wooden/plastic/plaster wall.
- Do not install the CL36 near readily flammable materials such as cloth, paper, straw, or plastic sheeting. Keep flammable materials from all sides including the front of the CL36.

Failure to follow these instructions can result in death or serious injury.

Flammable or combustible materials are defined as “any material containing wood, compressed paper, cellulose, plant fibers, plastics, liquids, or other material that will ignite and burn, whether flame-proofed or not” according to NFPA 70E. Flammable liquids are defined as “any liquid whose flash point does not exceed 38 °C.” Examples of flammable liquids are gasoline, methanol, and ether.

When choosing a wall or flat surface to install the CL36, choose a wall or flat surface that is not considered a flammable material such as concrete, brick, or metal.

Handling Precautions

⚠ CAUTION

HEAVY LOAD HAZARD

- Do not handle and lift the unit by yourself. Use two people to move, lift, and mount the unit.
- Always use proper lifting techniques during installation.
- When handling the inverter, use the two handles, one on each side of the inverter.
- Use mechanical or motorized hand trucks and/or lifts whenever possible to aid in proper handling.

Failure to follow these instructions can result in moderate or minor injury.

Storage Considerations

If the inverter cannot be installed immediately after delivery at the installation site, consider storing the inverter inside its original carton and setting it aside away from potential damage. For more guidelines, see “Storage Information” on page x.

Location Hazards

In order to avoid other potential hazards follow the instructions in the WARNING below.

⚠ WARNING

ELECTRICAL SHOCK, FIRE, AND PHYSICAL INJURY HAZARD

- Install the CL36 on a concrete wall or metal frame which can support the weight (48 kg) of the unit over time. When installing multiple units, make sure the wall or metal frame can support the total weight of the units over time.
- Install the unit upright at 90° vertical angle in relation to the floor.
- Install the unit at the recommended height of ~1 m for easy access to the terminals and ports.
- Avoid installing the CL36 in completely uncovered locations where persistent rain and moisture spray can eventually penetrate the enclosure. Install under a covered structure.
- Install a separate and external surge protection device to protect the CL36's power module and communication ports.

Failure to follow these instructions can result in death or serious injury.

NOTICE

EQUIPMENT DAMAGE

- Never install the CL36 in direct sunlight or near other heat sources like the exhausts of inverters and generators, steam exhausts from boilers and dryers, and engine compartments. Install in shaded locations.
- Choose a location and an installation layout that minimizes potentially induced voltage spikes that might damage the electronics.

Failure to follow these instructions can result in equipment damage.

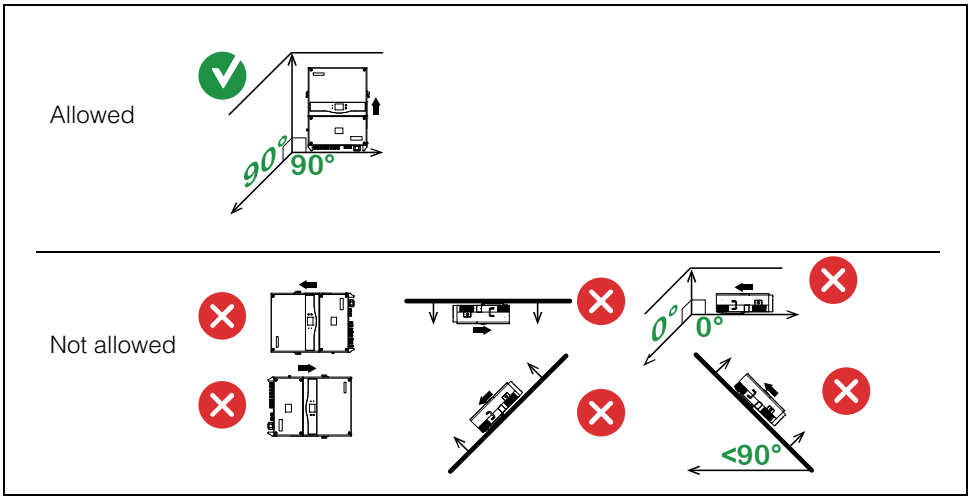

Figure 2-3 Mounting Orientations

Install and Mount the CL36

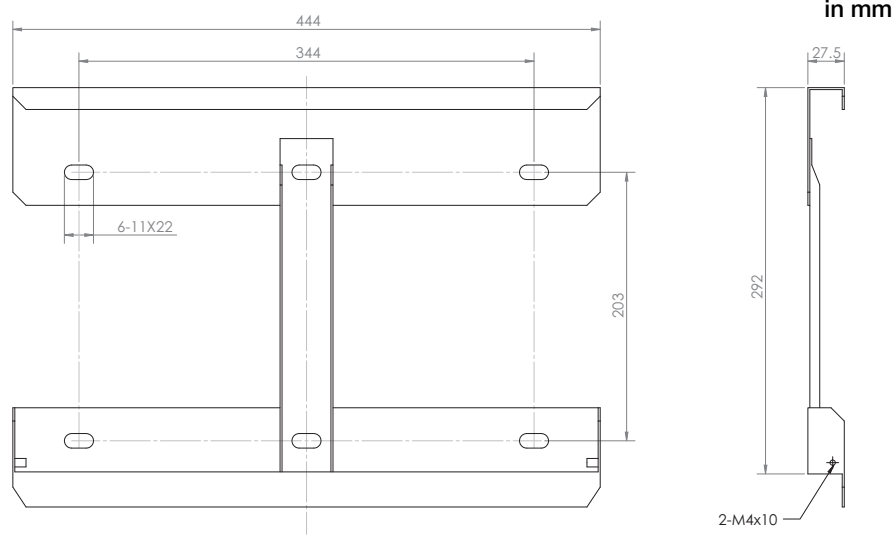

NOTE: Whenever possible, use only the supplied fasteners when mounting the inverter.

NOTE: To install the inverter onto a concrete wall, use the recommended M10x65 screws (not supplied).

Figure 2-4 Wall-mounting Backplate Dimensions

To install on a concrete or brick wall in an upright position:

1. Remove the wall-mounting backplate and the two M4x16 backplate screws from the CL36 packaging.
2. Follow all preceding precautions and warnings starting on page 2–3.
3. Unpack the backplate from the box and use the backplate to mark the location of the holes on the wall. See Figure 2-5, “Mark and Pre-drill Wall” on page 2–9.

DANGER

EXPLOSION HAZARD

Check that there are no plumbing or gas pipes or electrical conduits behind the wall when marking for holes and before drilling.

Failure to follow these instructions will result in death or serious injury.

4. Pre-drill the mounting surface, if necessary. See Figure 2-5, “Mark and Pre-drill Wall” on page 2–9.

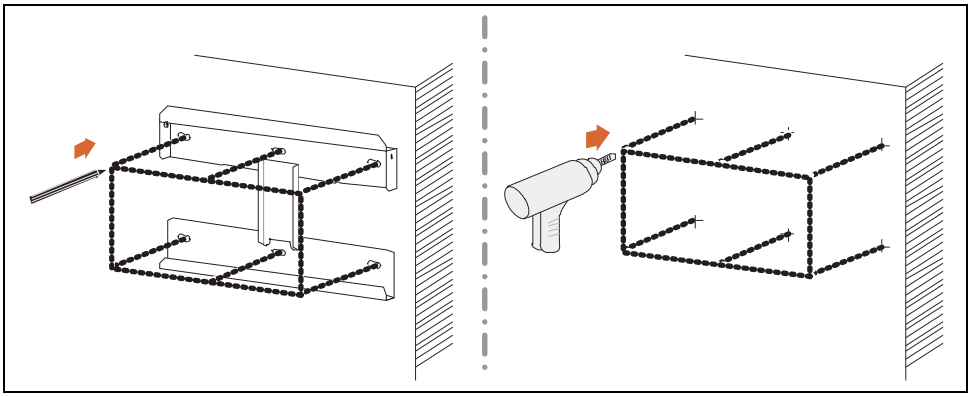

Figure 2-5 Mark and Pre-drill Wall

5. Fasten the wall-mounting backplate to the wall with six M10x65 screws (not supplied). Use a torque of 35 Nm (25.8 lbf-ft) to fasten the screws and the backplate.
6. Mount (hang) the inverter manually onto the backplate.

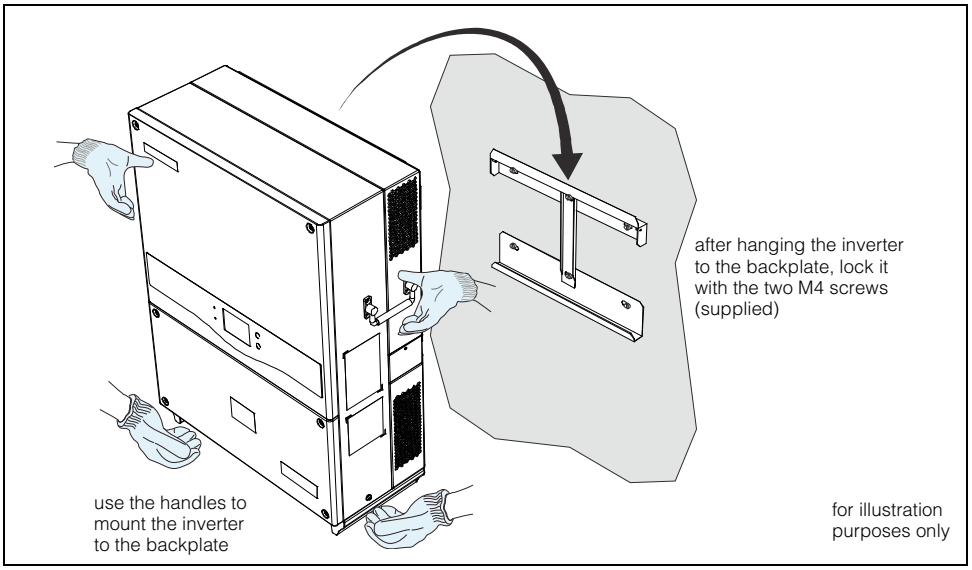

Figure 2-6 Mounting the CL36

7. Lock the inverter to the backplate by fastening the two screws (M4x16) as shown. See Figure 2-6.
8. Do not store anything inside the inverter enclosure.

To install on a metal frame in an upright position:

1. Remove the backplate, its corresponding metal frame fasteners, and the two M4x12 backplate screws from the CL36 packaging. Use only the provided metal frame fasteners for attaching to a metal frame structure.
2. Follow all preceding precautions and warnings starting on page 2–3.
3. Use the backplate to mark the metal frame with the location of the holes to be drilled. See Figure 2-7.
4. Pre-drill the mounting surface, if necessary. See Figure 2-7.
   Use a drill bit appropriate for a bolt of size M10.

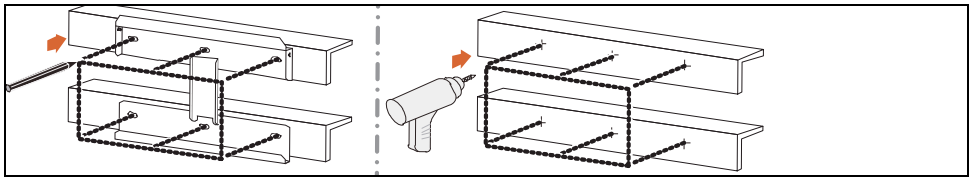

Figure 2-7 Mark and Pre-drill Metal Frame

5. Fasten the backplate to the metal frame using the metal frame fasteners that came with the CL36 packaging. Use a torque of 35 Nm (25.8 lbf-ft) to fasten the nut and the backplate.

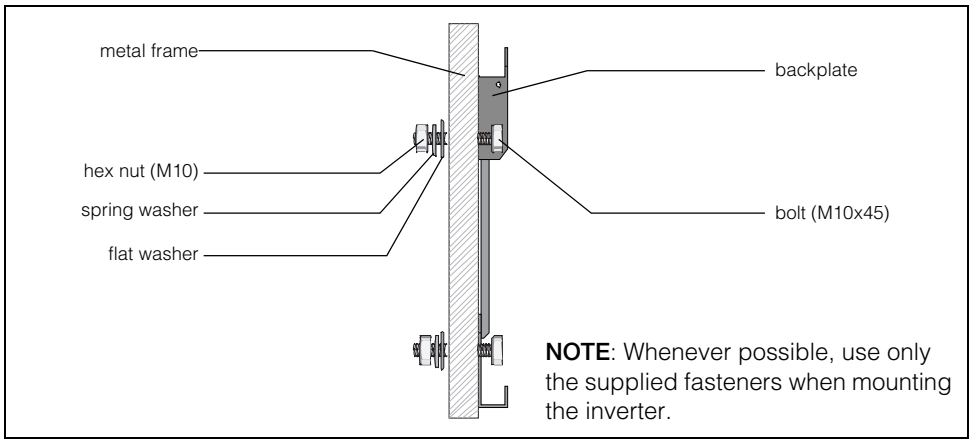

Figure 2-8 Securing the Backplate to the Metal Frame

6. Mount (hang) the inverter manually onto the backplate. See Figure 2-6, “Mounting the CL36” on page 2–9 for a similar illustration.
7. Lock the inverter to the backplate by fastening the two screws (M4x16). See Figure 2-6, “Mounting the CL36” on page 2–9 for a similar illustration.

Torque Values

⚠ CAUTION

FIRE HAZARD

Tighten fasteners such as screws, nuts, bolts, and cable glands (used for routing field wiring and current carrying cable) according to the recommendations in the table below. Incorrect torque may cause a fire.
Failure to follow these instructions can result in moderate or minor injury.

NOTICE

EQUIPMENT DAMAGE

Tighten fasteners such as wall screws, metal frame nuts, and panel screws according to the recommendations in the table below. Over torquing may damage the head of the fastener. Under torquing may loosen the installation over time.
Failure to follow these instructions can result in equipment damage.

Table 2-1 Summary of Torque Values

Type	Description	Nm
cable gland	for communication cables such as RS-485 Ethernet cable	6
cable gland	for larger AC cable	13
connector screw	Local Stop/Alarm wire connector (M2.5)	0.4
connector screw	RS-485 wire connector (M3.5)	0.8
fastener (metal)	metal frame-mounting backplate nut	35
fastener (wall)	wall-mounting backplate expansion	35
fastener	transparent protection panel	0.7 – 0.9
fastener	lower enclosure panel	4.1 – 4.5
fastener	to secure the CL36 unit to the mounting backplate	2.7 – 4.8
terminal gland	MC4 DC terminal	2.5 – 3
terminal screw	AC terminal block	8–12
terminal screw	PE (ground) terminal block	4.1 – 4.5

•THIS PAGE INTENTIONALLY BLANK•

3 Electrical Connections

Chapter 3 contains information about:

- Precautions
- Cabling and Wiring
- Communication Connection

Precautions

Before connecting the Conext CL36 to electrical cables, wires, and communication cables, read all instructions and cautionary markings in this Guide.

NOTE: Obtain all necessary permits prior to starting the installation. **Installations must meet all local codes and standards.** Installation of this equipment should only be performed by skilled personnel such as qualified electricians and Certified Renewable Energy (RE) System installers.

Planning the Electrical Connections

- Read this entire chapter before making electrical connections to and from the unit. It is important to plan the installation from beginning to end.
- Assemble all tools and materials needed for the installation.

Cabling and Wiring

DANGER

ELECTRIC SHOCK AND FIRE HAZARD

- All wiring must be done by qualified personnel to ensure compliance with all applicable installation codes and regulations.
- Do not connect the PV Inverter to a live power source prior to finishing all cabling and wiring. The inverter can be energized from two sources namely, DC from the PV array and AC from the grid.
- Do not connect any powered device to the PV Inverter during cabling and wiring.

Failure to follow these instructions will result in death or serious injury.

Material and Tools

The following materials and tools are not supplied but are required to complete the installation:

- AC power cable (5-wire)
- DC power cables (red+, black-)
- Shielded RS-485 cable for Modbus/RS-485 device
- Wire stripper, standard molex crimper, AC/DC crimp pins
- Screwdriver and drill set (powered and/or manual)
- Calibrated professional digital multimeter
- Crimping tool from Multi-Contact
- #2 Phillips screwdrivers or power screwdriver for mounting the bracket
- Slotted screw driver
- Stripper and crimping tool for both AC and DC wiring bubble level or Spirit level to ensure the straight installation of the mounting bracket
- Torque adjustable wrench
- Torx head screw driver T25

Once the Conext CL36 is installed at the site, it is now ready to be connected to the PV array and the utility grid.

DANGER

ELECTRIC SHOCK, EXPLOSION, OR ARC FLASH HAZARDS

- Apply appropriate personal protective equipment (PPE) and follow safe electrical work practices.
- This equipment must only be installed and serviced by qualified electrical personnel.
- Never energize the inverter with the covers removed.
- Do not open a fuse under load. The fuse must be de-energized from all sources before servicing.
- The inverter is energized from multiple sources. Before removing covers identify all source, de-energize, lock-out, and tag-out and wait 10 minutes. See “Lock-Out Tag-Out (LOTO) Procedure” on page xi.
- Always use a properly rated voltage sensing device to confirm all circuits are de-energized.
- Replace all devices and covers before turning on power to this equipment.
- The DC conductors of this photovoltaic system are ungrounded and may be energized.

Failure to follow these instructions will result in death or serious injury.

Terminal and Cable Entry Points

The CL36's electrical connection terminals are located inside the inverter wiring box and the cable entry points are at the bottom of the unit.

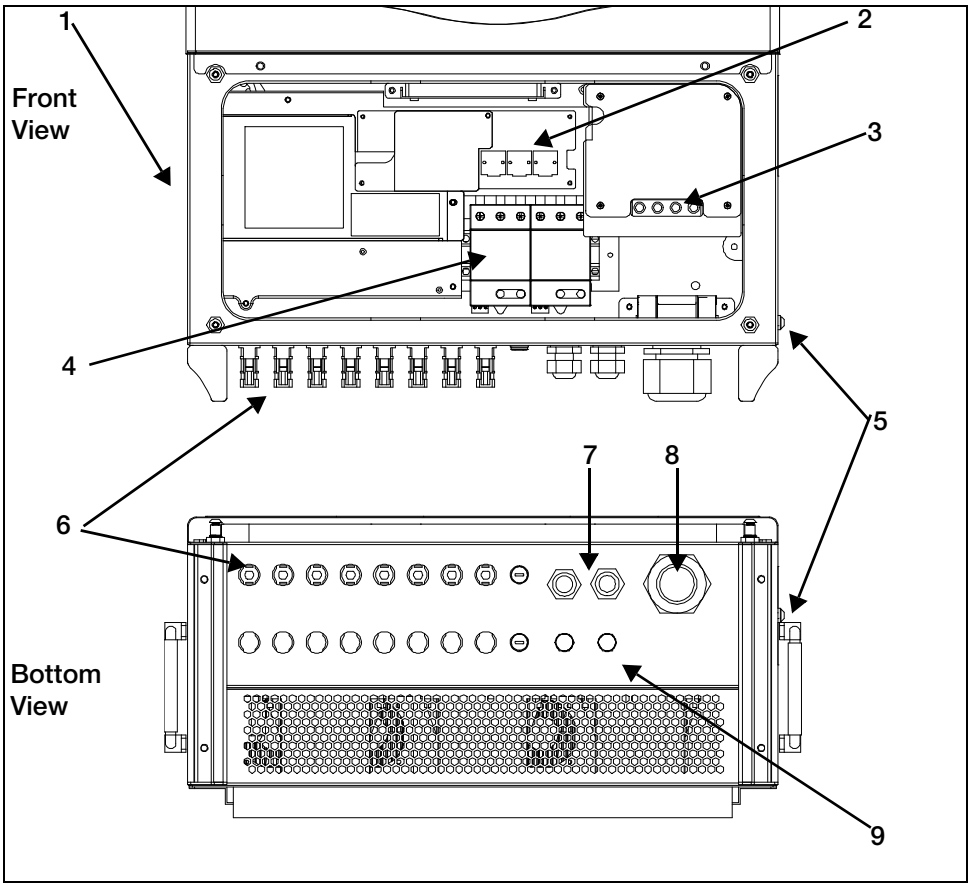

Figure 3-1 Terminals and Cable Entry Points

Table 3-1 Description of Terminals and Cable Entry Points

No.	Description	No.	Description
1	DC switch	**6**	DC input MC4 terminals
2	Configuration circuit board with RS-485	**7**	Communication cable glands
3	AC crimping terminal	**8**	AC cable gland (large)
4	DC SPD	**9**	Waterproof air valves
5	Second PE (ground) location		

AC Side Cable Connection

AC Side Requirements

NOTE: Connection to the utility grid must be done only after receiving approval from the local company.

Before connecting to the grid, verify that both the grid voltage and frequency meet the requirements of the CL36's voltage and frequency settings. Contact the local utility company for a solution if the grid does not meet the specifications. For information on the settings, see "Product Specifications" on page 8–2.

AC Circuit Breaker

An independent three- or four-pole circuit breaker must be installed downstream from the inverter before the grid connection. This is to ensure that the inverter can be disconnected safely from the grid.

Inverter	Recommended AC circuit breaker
CL36	63A

NOTICE

EQUIPMENT DAMAGE

- Do not connect multiple PV Inverters to a single circuit breaker.
- Do not connect loads between the PV Inverter and the circuit breaker.

Failure to follow these instructions can result in damage to the inverter and other connected equipment.

Residual Current Device

With an integrated comprehensive residual current monitoring component, the inverter is capable of distinguishing a ground fault current from normal capacitive leakage current. This allows the inverter to disconnect from the grid as soon as the ground fault is detected.

Multiple Inverters in Parallel Connection

Follow either of the two scenarios when attempting to connect several inverters in parallel to the grid.

Scenario 1

Several inverters are in parallel connection to the 3-phase low voltage grid.

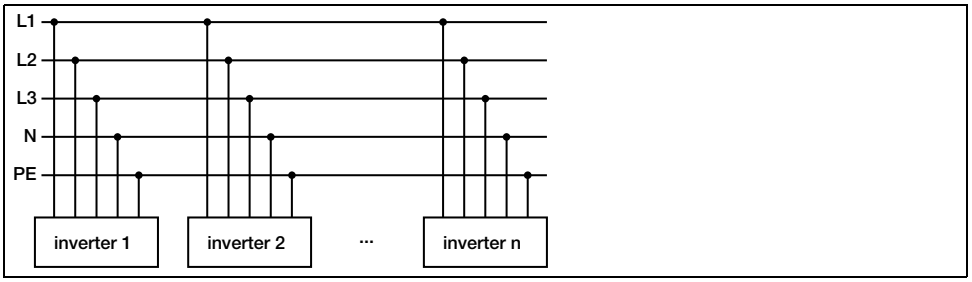

Requirements If the number of the grid-connected PV Inverters exceed 40, contact a local Schneider Electric Solar Sales Application Engineer (SAE).

Scenario 2

Several inverters are in parallel connection to the low voltage side of the MV transformer. The high voltage side is connected to the MV grid.

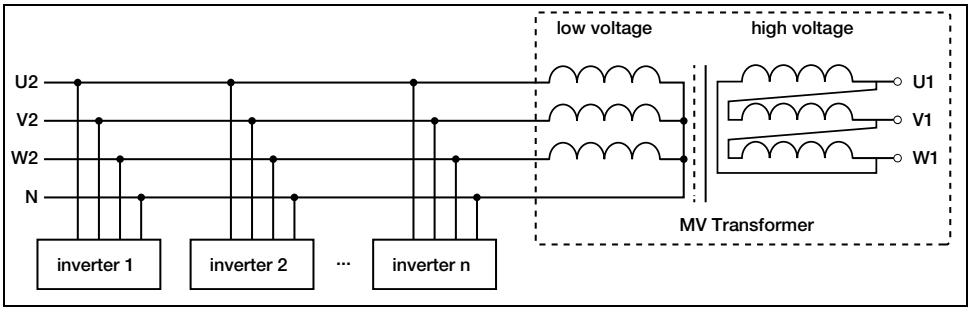

Requirements If the number of the grid-connected PV Inverters exceed 40, contact a local Schneider Electric Solar Sales Application Engineer (SAE).

The nominal power of the MV transformer's low voltage side matches the inverter's output power.

NOTE: It is recommended to use a transformer with a short circuit impedance of less than 6%.

Other Requirements The following is a list of requirements for installing MV transformers.

- The inverter transformer can be a distribution transformer but it must be designed for typical cyclical loads of a PV system such as, loads during daylight and possibly no loads during nighttime.
- The inverter transformer can be of two types - liquid-immersed or dry. Shield winding is not necessary.

- The line-to-line voltage on the low voltage side of the transformer must endure the output voltage of the inverter. When connecting to the IT grid, the withstanding voltage of the low voltage winding side of the transformer, the AC cables, and secondary devices (including relay protection, detection and measuring, and other auxiliary devices) to the ground must not be lower than 1100 VAC.
- The line-to-line voltage on the high voltage side of the MV transformer must comply with the power grid voltage of the installation site.
- A transformer with a tap changer on the high voltage side is recommended in order to remain consistent with the grid voltage.
- Transformers must withstand 110% of the total load rating at an ambient temperature of 25 °C.
- The short circuit impedance (%) of the transformer must be 6% (the impedance allows 10% error margin).
- The load curve of the transformer and the ambient conditions at the installation site must be taken into account for thermal rating.
- The inverter's apparent power is not permitted to exceed the transformer power. The maximum nominal AC current of all connected inverters must be taken into account. If the number of grid connected inverters exceed 40, contact a Schneider Electric Solar representative to confirm the technical solution.
- The transformer must have overload and short circuit protections.
- Since the transformer is an important part of the grid-connected PV system, the fault carrying capacity of the transformer must be taken into account at all times. Such fault types include system short circuit, ground fault, voltage drop, etc.
- Ambient temperature, relative humidity, altitude, air quality and other relevant environmental indexes must be taken into account at all times.
- The geographical and jurisdictional specific power grid frequency must be taken into account.
- The regional, national, and local specific standards and directives must be taken into account.

Grid Connection

The AC terminal block on the bottom of the CL36 inverter accommodates an AC connection for a 3-phase-5-wire grid connection (**L1**, **L2**, **L3**, **N** and **PE**).

Requirements If the AC side of the inverter has anti-PID function, the voltage of the grid-connected side of the transformer or the AC output of the low voltage switch cabinet to ground may be increased. The following is a list of requirements.

- If the low voltage winding is WYE, the neutral point cannot be grounded.
- The maximum effective voltage of the inverter's AC output to ground is 850 V with a peak of 1000 V. The maximum continuous work voltage and the action voltage of the SPD selected for the transformer's low voltage side and the AC combiner box must also meet the requirements above. The "3+1" solution shown below is recommended. The maximum continuous work voltage of M1, M2, M3, and M4 is 440 VAC.

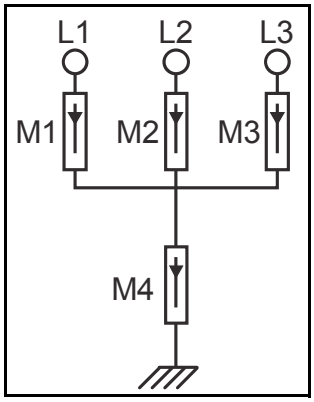

- The withstanding voltage of the low voltage winding side of the transformer, the AC cables, and secondary devices (including relay protection, detection and measuring, and other auxiliary devices) to the ground must not be lower than 850 VAC.
- If the AC side has no anti-PID function or other special requirements, you must ground the grid neutral point or connect the AC output terminals **N** and **PE**.

AC Cable Requirements

Select AC cables according to the following factors:

- Grid impedance should correspond to the specifications below to avoid accidental short-circuit or output power derating.

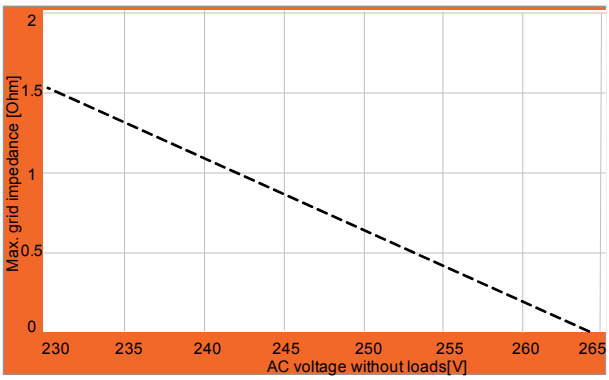

- When calculating voltage drop, a cable with a higher cross section area could be selected to ensure power loss within a 1% limit. Check that the AC cable outer diameter is suitable for the AC terminals of the inverter.
- Ambient temperature
- Cable layout (that is, inside wall, underground, free air, etc.)
- UV resistance
- Cable resistance / length

AC Cable Connection

To connect the PV Inverter to the grid:

DANGER

ELECTRIC SHOCK, EXPLOSION, OR ARC FLASH HAZARD

- Apply appropriate personal protective equipment (PPE) and follow safe electrical work practices.
- This equipment must only be installed and serviced by qualified electrical personnel.
- Never energize the inverter with the covers removed.
- Do not open a fuse under load. The fuse must be de-energized from all sources before servicing.
- The inverter is energized from multiple sources. Before removing covers identify all source, de-energize, lock-out, and tag-out and wait 10 minutes.
- Always use a properly rated voltage sensing device to confirm all circuits are de-energized.
- Replace all devices and covers before turning on power to this equipment.
- The DC conductors of this photovoltaic system are ungrounded and may be energized.
- Do not connect to the AC circuit breaker until all inverter electrical connections are completed.

Failure to follow these instructions will result in death or serious injury.

1. Open the AC circuit breaker (turn it OFF) and perform the “Lock-Out Tag-Out (LOTO) Procedure” on page xi.
2. Remove the four screws on the front cover of the wiring box to access the terminals.

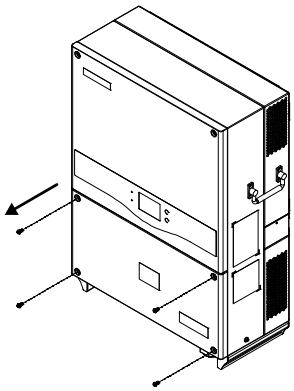

3. Strip the cables as shown below. Example below is for a five-wire cable.

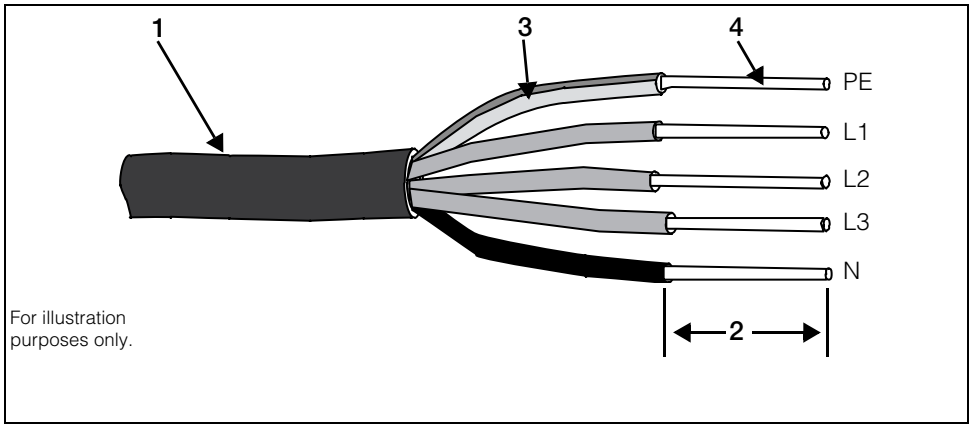

NOTE: For AC cables with stranded wires, use cold-press terminal lugs for termination. Always use lugs that grip the shape of the wires on AC cables. Always use the proper lugs according to the type of metal of the wires on AC cables.

The cross-section diameter of the AC cable must be selected carefully in order to prevent accidental disconnections of the inverter from the grid due to high impedance of the cable.

No.	Description	Remark
1	Protective layer	External diameter of the cable: Proper range 22 to 32 mm
2	Length of insulation to be stripped off	18-21 mm
3	Insulation layer	-
4	Cross section of AC cable	Range: 16 to 50 mm^2 Recommended value: 50 mm^2
5	Type	Copper

The following table lists the recommended maximum length of the AC cable based on its cross-section diameter.

Cross-section of the AC cable (mm^2)	Max. length of the AC cables (m) Cu
16	0-50
30	50-100
50	>100

4. Connect the AC cable's wires to their corresponding terminals.
5. Pull the cable away from the terminals gently to make sure the wires do not disconnect from their terminals.

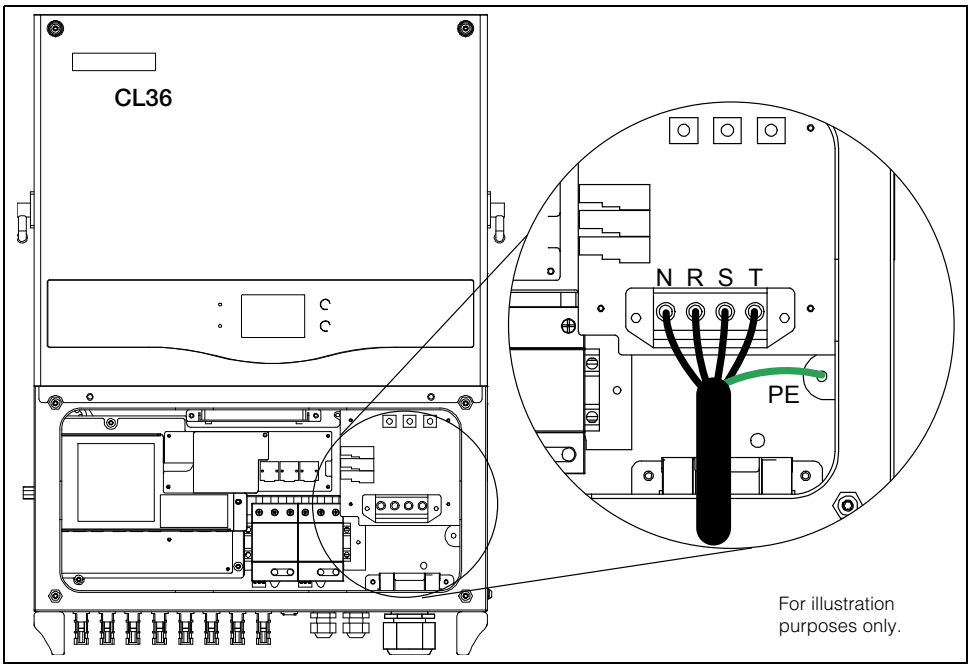

DANGER

ELECTRIC SHOCK HAZARD

- Observe and strictly follow the AC terminal layout. The PV Inverter will not work normally if the phase wire is connected to the PE terminal.
- Do not insert wires without stripping the insulation layer. Damaged wires may affect the normal operation of the inverter.

Failure to follow these instructions will result in death or serious injury.

PV Array Connection

DANGER

ELECTRIC SHOCK, EXPLOSION, OR ARC FLASH HAZARDS

- Apply appropriate personal protective equipment (PPE) and follow safe electrical work practices.
- This equipment must only be installed and serviced by qualified electrical personnel.
- Never energize the inverter with the covers removed.
- Do not open a fuse under load. The fuse must be de-energized from all sources before servicing.
- The inverter is energized from multiple sources. Before removing covers identify all source, de-energize, lock-out, and tag-out and wait 10 minutes.
- Always use a properly rated voltage sensing device to confirm all circuits are de-energized.
- Replace all devices and covers before turning on power to this equipment.
- The DC conductors of this photovoltaic system are ungrounded and may be energized.

Failure to follow these instructions will result in death or serious injury.

DANGER

ELECTRIC SHOCK, EXPLOSION, OR ARC FLASH HAZARDS

- Be careful when handling cables from PV arrays. PV arrays produce electrical energy when exposed to light.
- Check that the PV impedance to ground is within specifications before connecting the PV array to the inverter.

Failure to follow these instructions will result in death or serious injury.

PV Input Configuration

The CL36 PV Inverter has a PV input area and is equipped with a built-in Maximum Power Point Tracker (MPPT).

NOTICE

EQUIPMENT DAMAGE

- Check and make sure that the voltage capacity rating of each PV array is less than 1100 V.
- Check that the maximum short circuit current on the DC side is within specifications.

Failure to follow these instructions may cause inverter damage.

To make full use of the DC input power, PV modules should be homogenous. This means that each module in the PV string must be of the same type and the same number of PV cells. All the PV strings should have identical tilt and orientation.

Before connecting a PV string to the inverter, the following electrical parameters must be met.

Total DC power limit	Max. open-circuit voltage limit for each input	Short-circuit current limit of each input
36800 W[a]	1100 V	36 A

a.Multiply by a factor of 1.35 for over-panelling.

Considering the negative voltage temperature coefficient of PV cells, more attention should be paid to the open-circuit voltage of PV strings when the ambient temperature is the lowest. For example, consider the YL250P-29bPV module.

Item	Parameter
PV module model	YL250P-29b
Power	250W
Open-circuit voltage (STC)	37.6V
Short-circuit current (STC)	8.92A
Open-circuit voltage temperature coefficient (β)	-0.32%/°C
No. of PV modules in a PV string	23

Under the STC condition, where ambient temperature is 25 °C, the open-circuit voltage of PV cells is

$37.6\ V \times 23 = 864.8\ V < 1100V$

Suppose that the lowest temperature is -25 °C, the open-circuit voltage of PV cells is

$23 \times 37.6\ V \times [1 + \beta \times (\text{min. ambient temperature} - \text{STC temperature})] = 23 \times 37.6\ V \times [1 + (-0.32\%/°C) \times (-25°C - 25°C)] = 990V < 1000V$ (meets the operational requirement)

Therefore, the PV string should be designed to meet the open-circuit voltage requirement even under the lowest ambient temperature condition.

PV Input Connection

DC input cables are connected to the PV input terminals of the inverter. DC cables from the PV string should be equipped and terminated with MC4 connectors.

NOTE: To maintain the IP65 protection rating, use only the supplied DC connectors (MC4). When replacing lost connectors, they have to match the same supplied connectors. Using other connectors will invalidate the warranty.

Table 3-2 DC Cable Requirements

Model	Cross-sectional area	Cable External diameter	Max. withstand voltage	Max input current for each PV string
CL36	4 to 6 mm^2	6 to 9 mm	1100 V	12 A[a]

a.The recommended current of each DC input should be less than 12 A. Otherwise, the fuse may blow.

DC Cable Connection

To connect DC input cables to the inverter:

DANGER

ELECTRIC SHOCK, EXPLOSION, OR ARC FLASH HAZARD

- Apply appropriate personal protective equipment (PPE) and follow safe electrical work practices.
- This equipment must only be installed and serviced by qualified electrical personnel.
- Never energize the inverter with the covers removed.
- Do not open a fuse under load. The fuse must be de-energized from all sources before servicing.
- The inverter is energized from multiple sources. Before removing covers identify all source, de-energize, lock-out, and tag-out and wait 10 minutes.
- Always use a properly rated voltage sensing device to confirm all circuits are de-energized.
- Replace all devices and covers before turning on power to this equipment.
- The DC conductors of this photovoltaic system are ungrounded and may be energized.
- Do not connect to the DC circuit breaker until all inverter electrical connections are completed.

Failure to follow these instructions will result in death or serious injury.

1. Strip off 7 mm (~¼ inch) of insulation layer from all DC cables. Use a standard wire stripper.

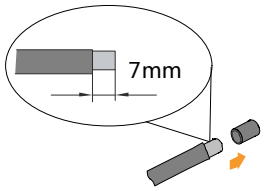

2. Terminate the cable ends with their matching crimp pins (supplied with the DC connector) as shown.

⚠ CAUTION

FIRE HAZARD

Use only the recommended crimping tool from Multi-Contact (http://ec.staubli.com/). Any other crimping tool may create improperly crimped cables and wires which can cause sparks and a short circuit.

Failure to follow these instructions can result in moderate or minor injury.

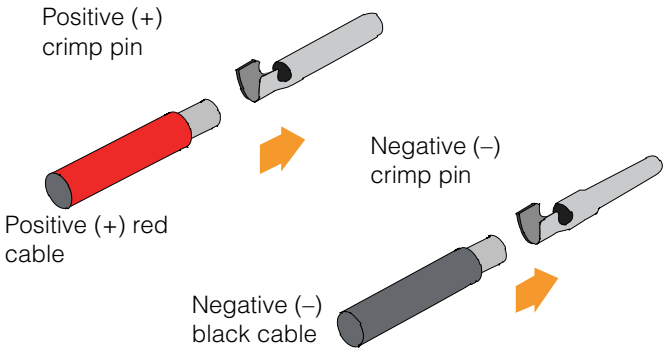

NOTE: Do not interchange the crimp pins.

3. Lead and route the cable through the cable gland of the DC connector.
4. Insert the crimp pin into the insulator cap until it snaps into place.
5. Pull the cable away from the insulator cap to make sure the cable does not disconnect from the cap.

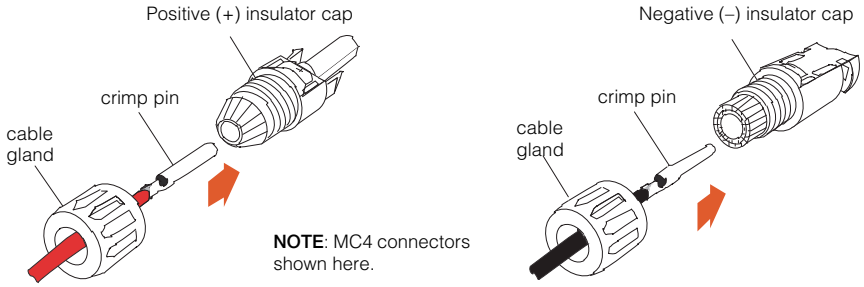

NOTE: MC4 connectors shown here.

6. Tighten the cable gland onto the insulator cap with a torque of 2.5-3 Nm. Use a pair of connector tool spanners, if available.
7. Check to make sure the polarities of the PV string's DC cables are correct. The DC cable must match its insulator cap (positive cable = positive insulator cap, negative cable = negative insulator cap).

NOTE: The inverter will not function properly if the DC polarities are reversed.

8. Turn the CL36's DC switch to OFF position.

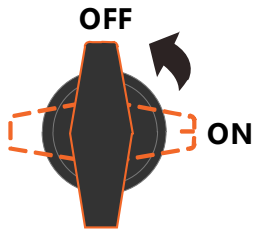

9. Double check the polarity of the DC cables and then check the open-circuit voltage and make sure it does not exceed the inverter's input limit of 1100 V (even under the lowest operating temperature).

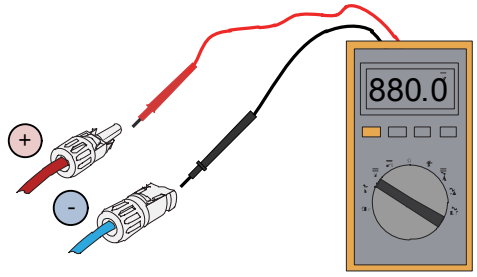

NOTE: Use a calibrated professional digital multimeter.

NOTICE

EQUIPMENT DAMAGE

- Check the positive and negative polarity of the PV cells. After confirming the correct polarities, insert the DC connectors into the PV input terminals of the inverter.
- Check every PV array in the string and avoid reversing the polarities.

Failure to follow these instructions may damage the inverter and other connected equipment.

10. Insert the positive and negative DC connectors into the PV input terminals on the inverter until a clear clicking sound is heard.

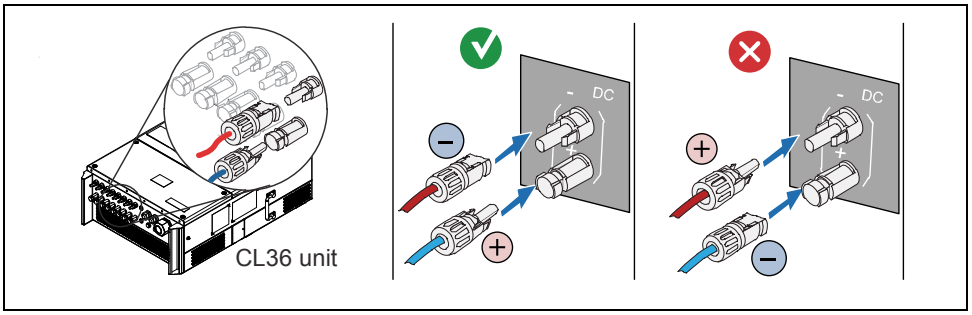

11. Repeat the steps for each PV string in the PV array.
12. Seal the unused DC terminals with waterproof plugs.

NOTE: For CL36 inverters, use an external 15 A in-line fuse connector (see Figure 3-2 on page 3–19) on the negative line, if required by local installation codes (such as in the UK, France, and Australia).

Connectors

The following are illustrations and product information of the different connectors.

Figure 3-2 In-line fuse connector

An in-line fuse connector (see Figure 3-2) is available to purchase from Multi-Contact for PV Inverter. To order, use the following part number:

- Part No.: 55000128-0050UR
- Description: PV-K/ILF 15/6N0050-UR in-line fuse harness

Grounding the Inverter

⚠ WARNING

ELECTRIC SHOCK HAZARD

Do not ground either DC positive or negative poles of the PV string. The Conext CL36 PV Inverter does not isolate the PV from the grid.

Failure to follow these instructions can result in death or serious injury.

Grounding System Overview

In this PV system, all non-current carrying metal parts and device enclosure should be grounded (such as the PV array frame and the inverter enclosure).

When there is only one inverter in the PV system, the PE cable must be grounded.

When there are multiple inverters in the PV system, they can be grounded at multiple points. Connect the PE cables of all the inverters and the mounting metal frames of the PV array to the equipotential cable (depends on the situation at the site) in order to establish an equipotential connection. See Figure 3-3.

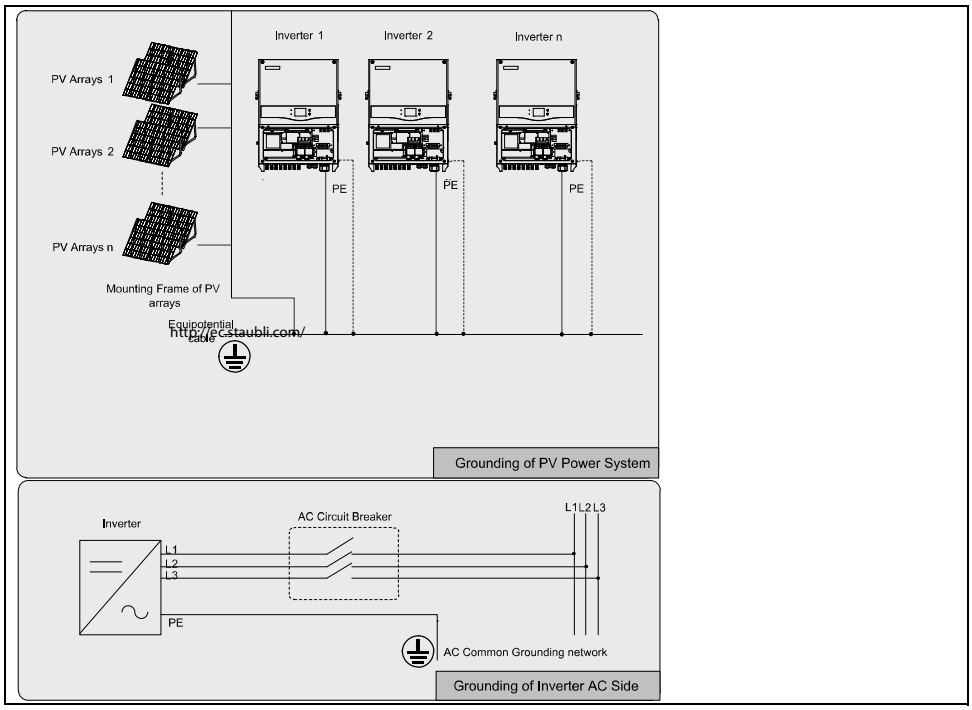

Figure 3-3 Grounding of Single or Multiple PV Inverters

Second Protective Earth Terminal

The Conext CL36 PV Inverter is equipped with a second protective earth (PE) terminal as specified in IEC/EN 62109-1.

Position of Second PE Terminal

There is a second PE terminal on the right side of the inverter. Perform a PE connection, if necessary.

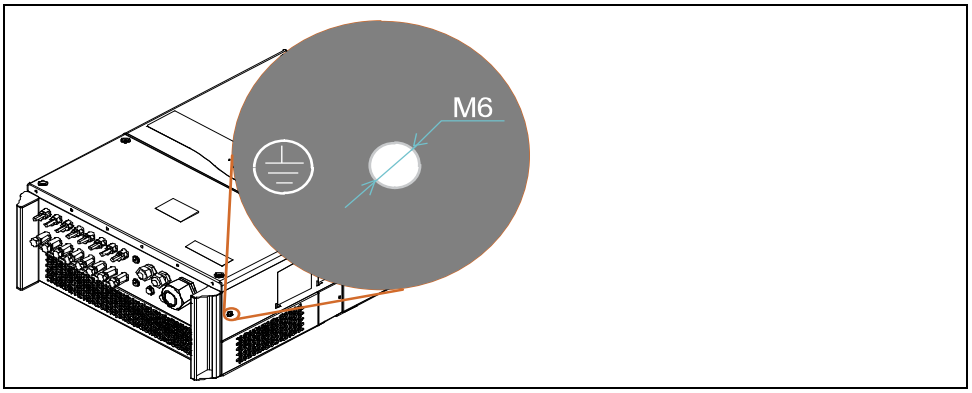

Figure 3-4 Second PE Terminal

Cable Connection

To connect a PE cable to the PE terminal:

- Follow the illustration below.

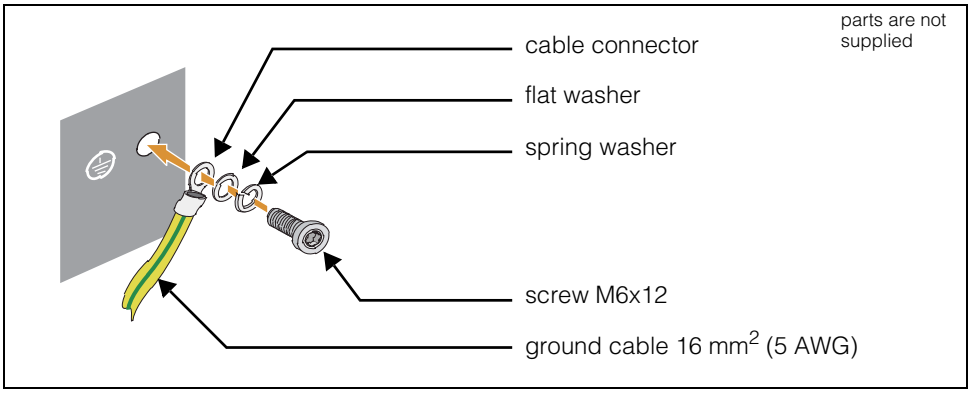

Figure 3-5 PE Terminal Connection

Communication Connection

Overview

The Conext CL36 PV Inverter has two waterproof communication connection terminals inside the wiring box. There are RS-485 A/B terminals which are provided on the communication circuit board of the wiring box. A 120Ω terminating resistor can be connected between the A and B communication cable through the dip switch.

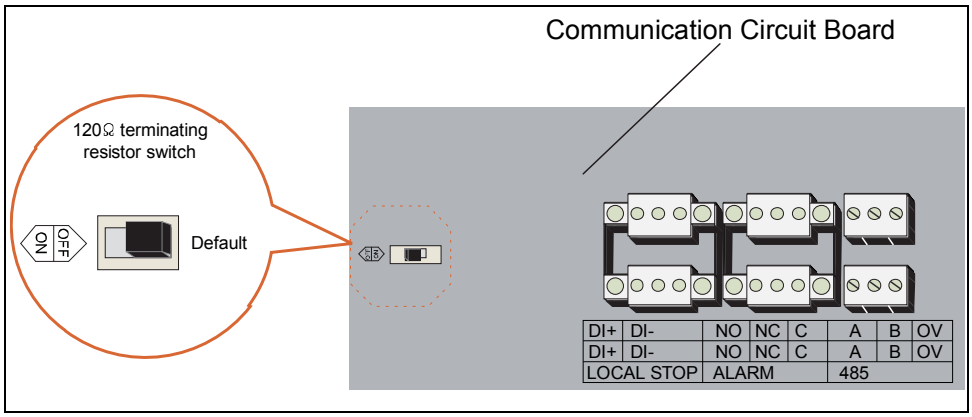

Figure 3-6 Communication Configuration

PV Inverter operational information can be transferred to a local data logging device through RS-485.

NOTE: Before proceeding, plan and prepare the correct type of RS-485 communication cables.

The RS-485 cables should be either of these two:

- shielded twisted pair cable
- shielded twisted pair Ethernet cable

A converter such as the RS-485-to-USB converter is needed to convert signals between the PV Inverter and the computer.

It is recommended to install an external surge protection device on the RS-485 communication line.

RS-485 Communication System

For A Single PV Inverter

One RS-485 cable is needed for this connection.

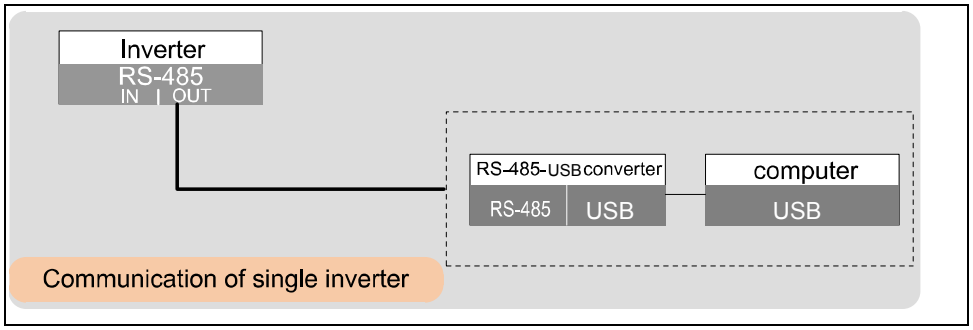

Figure 3-7 RS-485 Single Inverter Connection

Table 3-3 RS-485 Single Inverter Connection

PV Inverter	**Communication connection (RS-485 bus connection** RS-485 bus	**Terminating Resistor**
Single inverter	**out** only	No
	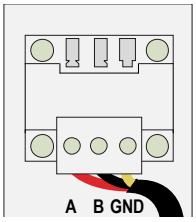	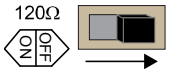

For Multiple Inverters

A number of RS-485 cables is needed for multiple connections. A simple formula of X = n – 1, where X is the number of RS-485 cables needed and n is the total number of PV Inverters. The inverters are inter-connected by daisy chain and the first and last inverters in the chain must be terminated with a 120Ω resistor. The shielding layer of the RS-485 cable should be single-point grounded.

The total length of RS-485 communication cable should be less than 1000 m.

Table 3-4 RS-485 Multiple Inverter Connections

	Communication connection (RS-485 bus connection	**Terminating Resistor**	
PV Inverter	**RS-485 bus**	**n≤15**	**n≥15**
Inverter 1	**out** only	No	Yes
	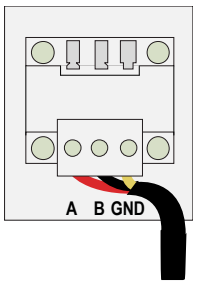	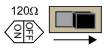	
Inverter 2 to n–1	**in** and **out**	No	No
	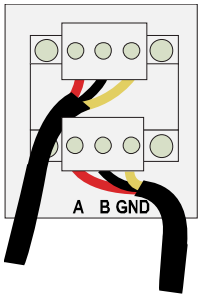	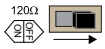	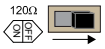
Inverter n	**in** and **out**	No	Yes
	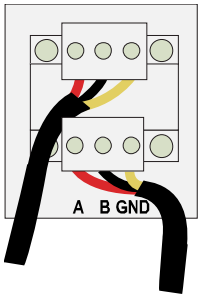	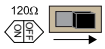	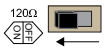

RS-485 Communication Connection

To connect an RS-485 cable to the terminal:

1. Lead and route the network cable through a communication cable gland to the communication circuit board.
2. Strip off the insulation layer of the communication cable. Connect the **A**, **B**, and **GND** wires of the RS-485 communication cable to their corresponding terminals which are labeled on the communication circuit board.
3. **Applies to multiple inverters**. Repeat steps 1 and 2 according to the position of the inverter (refer to Table 3-4 on page 3–24). For a single inverter refer only to Table 3-3 on page 3–23.
4. Pull cable/s out gently to make sure they do not disconnect from the terminal.
5. Switch the terminating resistor to ON or OFF, according to the position of the inverter in the case of multiple inverters (refer to Table 3-4 on page 3–24). For a single inverter refer only to Table 3-3 on page 3–23.
6. Tighten the sealing lock to seal off the vacant terminals to prevent dust and moisture from penetrating the inverter.
7. Replace the front cover of the inverter enclosure, if there is no other connection procedures to be done.
8. Connect the other end of the communication cables to their respective devices. Refer to the manuals of 3rd party devices or Gateway for connection information.
9. Set the communication parameters using the HMI and then confirm that there is a communication connection between the interconnected devices.

NOTE: For multiple CL36 units, the first and last units' terminating resistor in the RS-485 daisy chain must be switched to ON and the middle units are switched to OFF.

NOTE: If more than one inverter is connected to computer or logging device, set the RS-485 communication parameters from the LCD Display. For more information, see "Communication Parameter Setting" on page 5–36.

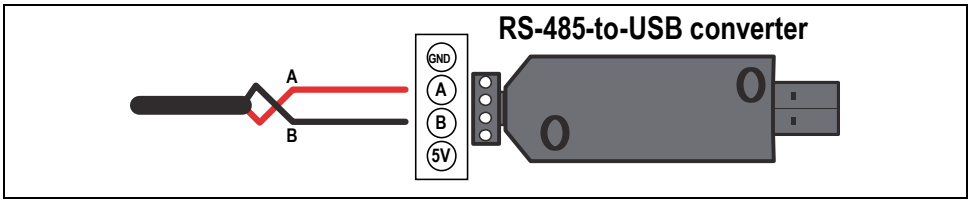

Figure 3-8 Wiring a Sample RS-485 to USB Converter

•THIS PAGE INTENTIONALLY BLANK•

4 Commissioning

Chapter 4 contains information about:

- Inspection Before Commissioning
- Commissioning Procedure

Inspection Before Commissioning

Check the following before starting the PV Inverter.

- ❑ The PV Inverter is accessible for operation, maintenance, and service.
- ❑ Check to confirm that the inverter is stable and fixed on the wall/metal frame.
- ❑ Check for ventilation.
- ❑ Check for and remove any object such as tools and extra screws on top of the PV Inverter.
- ❑ Check that the PV Inverter and its accessories are connected securely.
- ❑ The cables are routed through the cable glands and protected against potential mechanical damage. Do not overtighten the sealing locks.
- ❑ The AC circuit breaker is installed and the cables are properly connected.
- ❑ The AC terminals are properly torqued according to recommended torque settings (see “Summary of Torque Values” on page 2–11). Check both top and bottom terminals and adjust accordingly.
- ❑ The PV cables with MC4 DC cable connectors are properly connected to the DC input terminals of the inverter.
- ❑ The terminals which are not being used inside the wiring box are sealed.
- ❑ The product warning label and rating label are affixed permanently and not peeling off from the product.

Commissioning Procedure

Make sure that “Inspection Before Commissioning” is done before operating the inverter.

1. Close (turn On) the AC circuit breaker.
2. Close (turn On) the DC disconnect device from the PV string (or array).
3. Rotate the DC switch to the ON position.
4. Observe the LCD Display.

   Suppose there is sufficient sunlight and enough DC power, the PV arrays shall initialize and supply DC power to the PV Inverter.

   The LCD Display is activated when DC voltage exceeds the inverter’s startup voltage.
5. Press V ESC to choose the country code. Press > OK to confirm.

   A WARNING message appears.

NOTE: Read the warning message and proceed accordingly. Select the country code according to the installation country of the inverter.

Each country code represents corresponding local protective parameters that have been preset before delivery. Before country setting, there is a warning screen.

After setting the country code, proceed with setting other parameters in accordance with the specific requirements of the local grid. Check thoroughly if the set parameters meet the local grid requirement.

NOTICE

EQUIPMENT DAMAGE

Reset the protection parameters as dictated in “Protection Parameter Setting” on page 5–31 if the country code was not set correctly during commissioning.

Failure to follow these instructions can result in equipment damage.

6. Press V ESC to choose the **Grid Code**. Press > OK to confirm.

   Depending on the country code set in the previous step, the grid code screens shall vary. Refer to the table below for information.

Country Code	Grid Code Screen	Description
GR	**Grid codes** ◉ GR_L ○ GR_IS	GR_L = inland Greece GR_IS = island of Greece
DE	**Grid codes** ◉ LV ○ MV	LV = low-voltage grid MV = medium-voltage grid
TK	**Grid codes** ◉ AG ○ YG ○ EN50438	applies to Turkey

Country Code	Grid Code Screen	Description
TH	**Grid codes** ◉ 220V ○ 230V	applies to Thailand
ZAF	**Grid codes** ◉ RPPs ○ NRS	applies to South Africa
CN	**Grid codes** ◉ NO PS ○ PS	applies to China
Other	**Grid codes** ◉ 50Hz ○ 60Hz	applies to countries with these two grid frequencies

7. Press ESC to choose the local **Pro-Stage**. Press OK to confirm.

Pro-Stage	**Pro-Stage** ◉ Single-stage ○ Multi-stage	For detailed information, see “Protection Parameter Setting” under “Multi-stage Protection Parameters Explanation” on page 5–34.

8. Press OK to move the cursor and then press ESC to set the local date and time. Press OK to confirm.

Time	**Time** YY/MM/DD Date: 18/12/21 Time: 10:06:13	Set the inverter time to local time. Incorrect time setting will affect the data logging.

9. Check and confirm all the settings. Press OK to confirm. Press ESC to exit and reset.

Setting confirmation	**Setting confirmation** Countries DE Pro-Stage Single-stage Grid codes LV Date 2018/12/21 Confirm above settings?	--

10. Observe the status of the LED indicators and the LCD Main Screen. The PV Inverter now enters into the startup process.

--	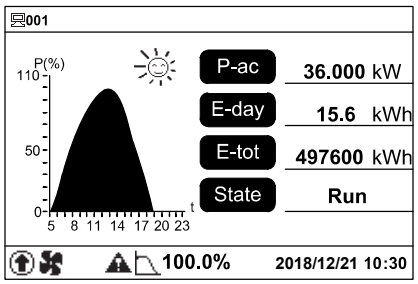	--

If commissioning succeeds, the **RUN** LED indicator will light up and **Run** will be displayed on **State**.

If commissioning does not succeed, the **ALERT** LED indicator will light up and **Fault** will be displayed on the screen. Press ESC to view **Current Fault** information. Remove the cause of the detected event and then repeat the “Commissioning Procedure”.

•THIS PAGE INTENTIONALLY BLANK•

5 LCD Display Operation

Chapter 5 contains information about:

- Description of the Selection Buttons
- Menu Tree
- Main Screen
- Contrast Adjustment
- Checking Running Information
- Checking History Information
- Starting/Stopping
- Password Entry
- System Parameter Setting
- Running Parameter Setting
- Protection Parameter Setting
- Communication Parameter Setting

Description of the Selection Buttons

The CL36 PV Inverter has two selection buttons for looking up information and configuring the settings (changing the parameters). The two buttons have multiple functions.

Button	Operation	Description
V ESC	Press for less than two seconds	Move upwards or downwards or scroll among set values.
	Press for more than two seconds	Return to the previous menu or cancel the command.
> OK	Press for less than two seconds	Move left or right, or turn pages.
	Press for more than two seconds	Enter into the sub-menu or confirm the command.

NOTE:

- After one minute of no button activity, the LCD backlight turns off.
- After two minutes of no button activity, the interface system returns to the default screen (the Main Screen).

Menu Tree

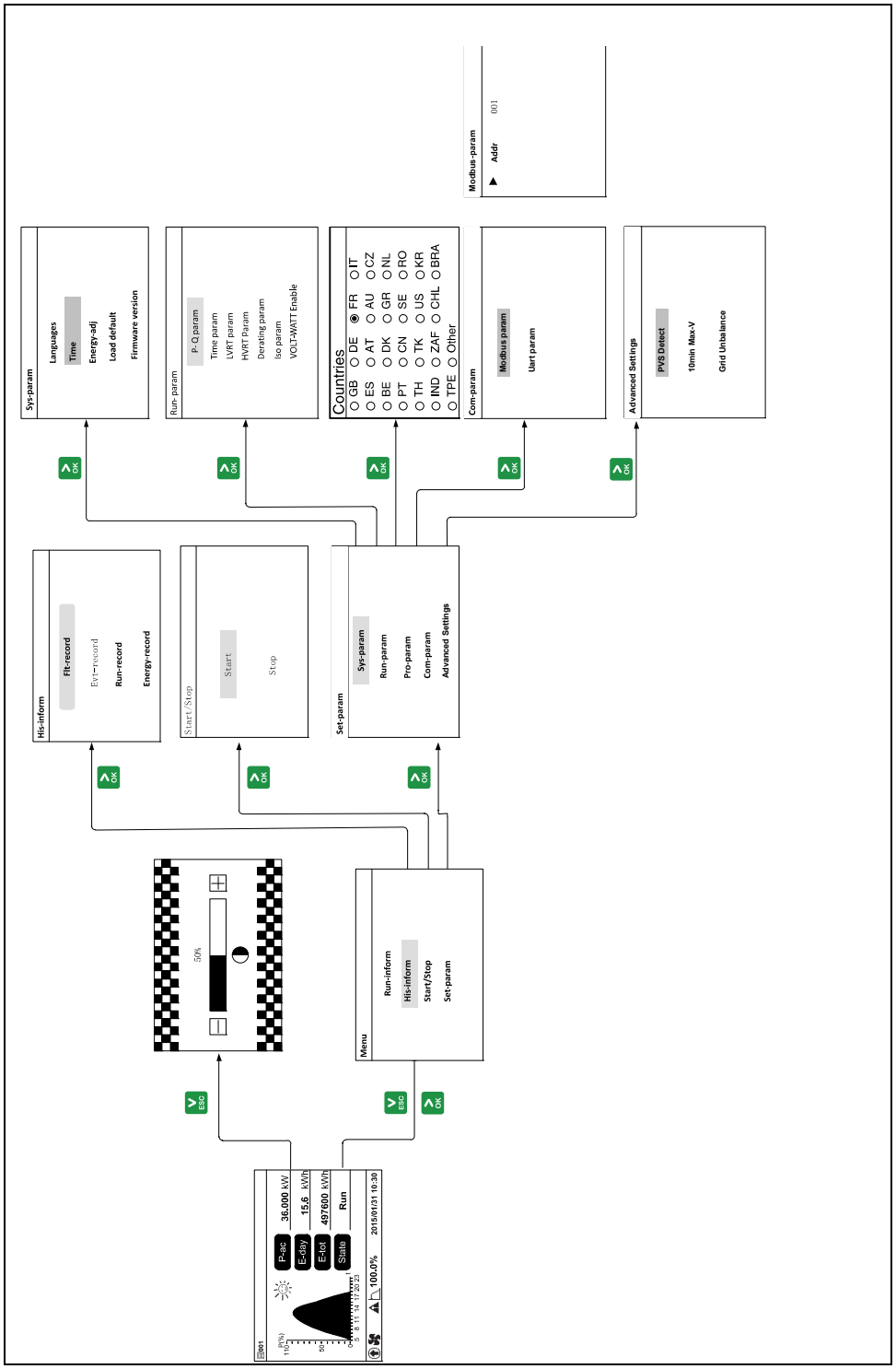

Figure 5-1 Menu Tree

Main Screen

After commissioning is finished, the LCD Display will show the Main Screen.

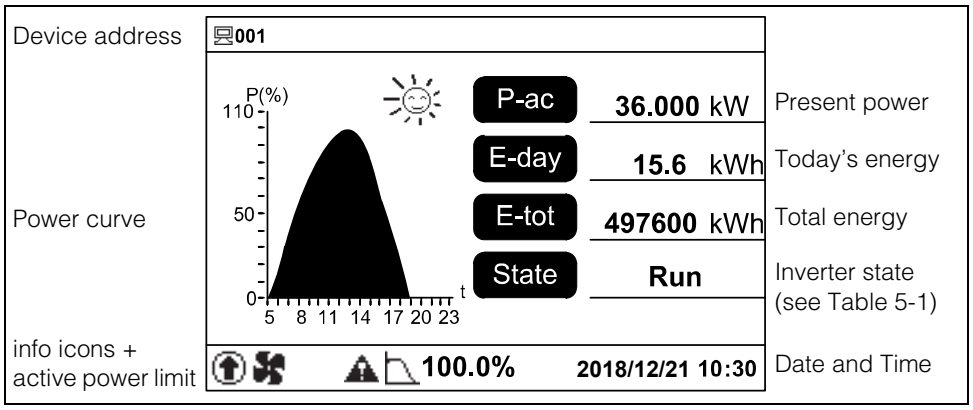

Figure 5-2 Main Screen (Default Screen)

Table 5-1 Description of the Inverter States

State	Description
Run	After being energized, the inverter tracks the PV arrays' maximum power point (MPP) and converts the DC power into AC power. This is the normal operational mode.
Standby	The inverter enters Standby mode when DC Input is insufficient. In this mode, the inverter will wait within the Standby duration (set by user, see "Main Screen of Run-param" on page 5–17).
Stop	Inverter operation is stopped.
Key-stop	The inverter will stop operation manually via the LCD Menu. In this way, the inverter's internal DSP stops. To restart the inverter, manually start from the LCD Menu.
Start…	The inverter is initializing and synchronizing with the grid.
Upd-fail	Firmware upgrade failure.
Fault	If a ground fault (or any event) is detected, the inverter will automatically stop operation, disconnect the AC relay, and display the ground fault (or event) code on the LCD Display with the **ALERT** ! indicator on.
	Once the ground fault (or event) is removed in recovery time (to set, see "Main Screen of Run-param" on page 5–17), the inverter will automatically resume running.
Warning	Warning information is detected.
Dispatch	Happens when the inverter's output power is lowered by active control method. This means that the user is selectively reducing output power as opposed to being forced, such as, when derating.

If the inverter detects a ground fault or any event, press > OK or V ESC to view the event code. To know the meaning of the code, see “LCD Screen” on page 6–4.

Table 5-2 Info Icons Description

Icon	Description
	Inverter is in firmware update process.
	Inverter in power derating state.
	Fans are operational.
	Inverter is operating in warning state.

Contrast Adjustment

1. Press ESC to enter into the contrast adjustment screen.

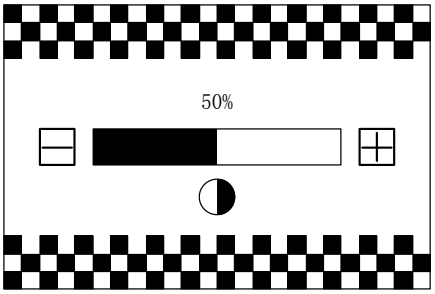

2. Press ESC to increase the setting value and press OK to decrease the value.
3. Press OK to confirm the contrast setting.

   Contrast adjustment range: 0 to 100%

   Recommended value: 50% or 60%.

Checking Running Information

The Main Screen displays some basic information about the inverter. For more detailed information, operate as follows:

Main Screen (Press OK) -> Menu -> Run-inform (Press OK)

The LCD Display will show the detailed running information.

Scroll pages by pressing OK / ESC .

DC power input: the total PV input power.

Vdc[V]: DC voltage of each input.

Idc[A]: DC current of each input.

Pdc[W]: DC power of each input.

DC power input	00000W		
	Vdc [V]	Idc [A]	Pdc [W]
DC1	290.6	0.0	0.0
DC2	0.0	0.0	0.0
DC3	0.0	0.0	0.0

DC current info: total current for each DC line.

DC1-1 : 0.00 A	DC2-2 : 0.00 A
DC1-2 : 0.00 A	DC2-3 : 0.00 A
DC1-3 : 0.00 A	DC3-1 : 0.00 A
DC2-1 : 0.00 A	DC3-2 : 0.00 A

Vac[V]: Phase voltage

Iac[A]: Phase current

Pac[W]: AC output of each phase

F[Hz]: Frequency of each phase

NOTE: CL36 models show Line-to-Neutral (L-N) phase voltages.

	R	S	T
Vac[V]	230.0	230.0	230.0
Iac[A]	6.0	6.0	6.0
Pac[W]	0000	0000	0000
F[Hz}	00.00	00.00	00.00

CO_2-reduce: Total CO_2 emission reduction due to the inverter's energy output.

E-month: Energy generated this month.

h-Total: Total running hours of the inverter.

T-today: Inverter running time today.

Temp: Internal temperature of the inverter.

ISO: DC string input cable insulation resistance to the ground.

CO_2-reduce	6kg
E-month	10kWh
h-Total	1h
T-today	63min
Temp	25.0°C
ISO	20000kΩ

P-W: Inverter output active power.

S-Va: Inverter output apparent power.

Country: Inverter selected country code (see "Country Setting" on page 5–31)

Grid code: Inverter selected grid code (see "Grid Codes" on page 5–32)

P-W	100W
S-Va	130VA
Country	DE
Grid code	LV

Checking History Information

Checking Running Records

Main Screen (Press OK) -> Menu (Press ESC , Press OK) -> His-inform (Press ESC twice, Press OK) -> Run-record (Press OK)

On the **Run-record** screen, scroll pages by pressing OK , and press OK to select the date you want to view. Confirm by pressing OK .	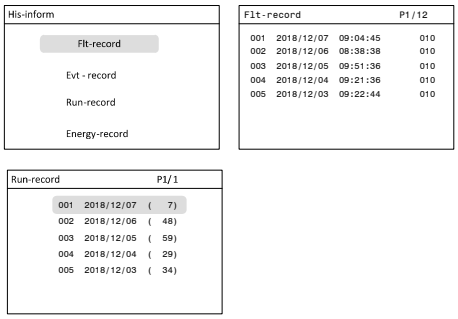
LCD Display shows the running records. Press OK to turn pages and press ESC to view the records of the selected date. CL36	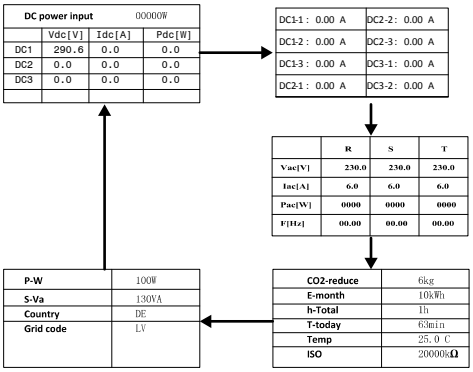

Checking Fault (Event) Records

Main Screen (Press OK) -> Menu (Press ESC , Press OK) -> His-inform (Press OK) -> Flt-record (Press OK)

On the **Flt-record** screen, scroll pages forward by pressing OK , and press ESC to scroll pages backward.	Flt-record P1/12 001 2018/12/07 09:04:45 010 002 2018/12/06 08:38:38 010 003 2018/12/05 09:51:36 010 004 2018/12/04 09:21:36 010 005 2018/12/03 09:22:44 010

NOTE: The inverter can only store the 100 most recent fault (event) records.

Checking History Event Records

Main Screen (Press OK) -> Menu (Press ESC , Press OK) -> His-inform (Press ESC , Press OK) -> Evt-record (Press OK)

On the **Evt-record** screen, scroll pages forward by pressing OK , and press ESC to scroll pages backward.	Evt -record P1/12 001 2018/12/07 01:04:45 Fault 002 2018/12/07 08:01:38 Fault 003 2018/12/06 15:51:01 Fault 004 2018/12/06 14:01:36 Fault 005 2018/12/06 01:22:44 Fault

NOTE: The inverter can only store the 100 most recent event records.

Checking Energy Records

Main Screen (Press OK) -> Menu (Press ESC , Press OK) -> His-inform (Press ESC , Press OK) -> Energy-record (Press OK)

The LCD Display shows the energy records. Press ESC : to view various energy records such as power curve, daily energy histogram, monthly energy histogram, and annual energy histogram.	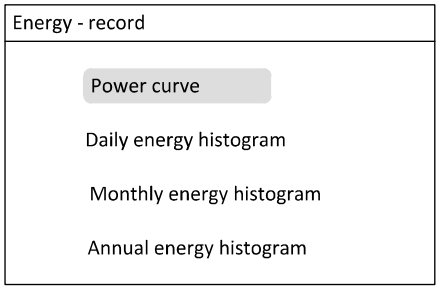
Power curve: shows the power output from 5am to 11pm in a single day. Each point in the curve is the percentage of present power and nominal power. Press OK or ESC to view the power curve of the latest 7 days.	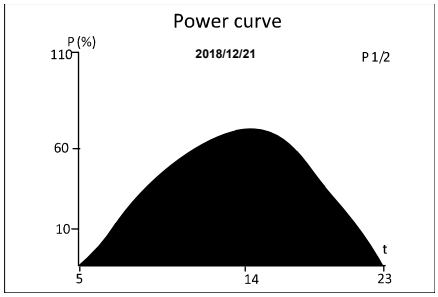
Daily energy histogram: shows the power output every day in the current month. Press OK or ESC to view the daily energy of the latest 12 months.	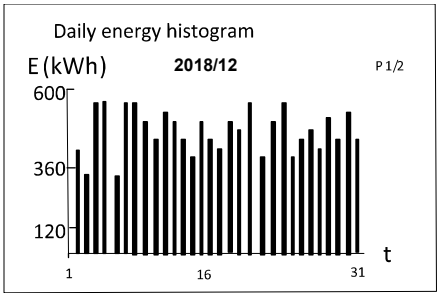
Monthly energy histogram: shows the power output every month in a year. Press OK or ESC to view the monthly energy of the latest 15 years.	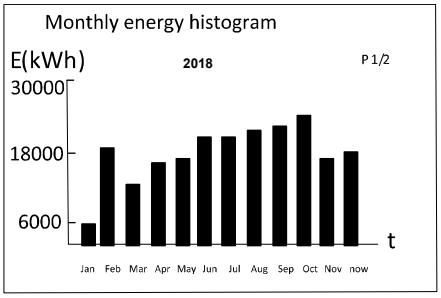

Annual energy histogram: shows the power output every year. Press OK or ESC to view the annual energy of the latest 90 years.	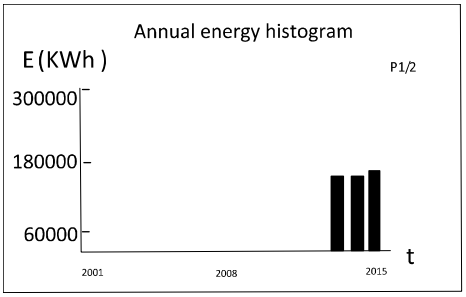

Starting/Stopping

Main Screen (Press OK) -> Menu (Press ESC twice) -> Start/Stop (Press OK)

Press ESC to choose Start/Stop and press OK to confirm the choice. Press OK to confirm.	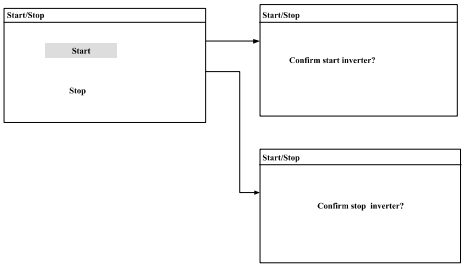

Password Entry

Parameter setting is password-protected. To set the parameters, you should enter the correct password.

1. Press OK to enter the Menu Screen.
2. Press ESC to move the cursor to **Set-param** and confirm by pressing OK .
   A password confirmation screen appears.
3. Press OK to move cursor right and press ESC to input the password 111111.

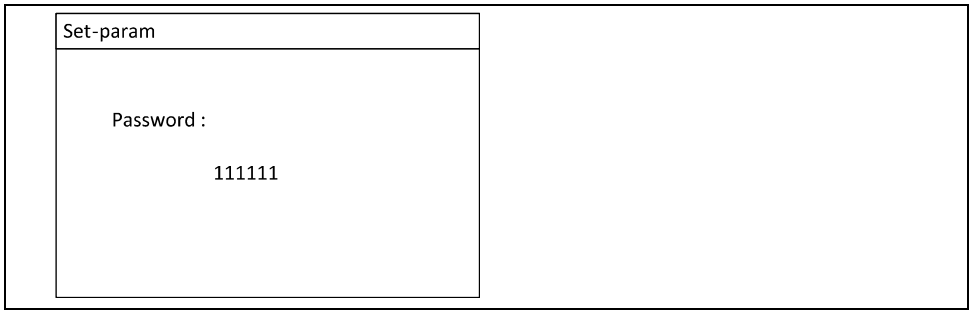

4. Press OK to confirm the password and enter the **Set-param** sub-menu.

System Parameter Setting

There are various user-configurable system parameters. Configure the system parameters after entering the correct password.

Language Setting

Main Screen (Press OK) -> Menu (Press ESC three times) -> Set-param (Press OK) -> Enter password (Press OK) -> Sys-param (Press OK , Press ESC) -> Languages (Press OK)

If **Auto** is selected for languages, the inverter system language will be the language of the country selected.	**Sys-param** **Languages** **Time** **Energy-adj** **Load default** **Firmware version**
	Languages ● Auto ○ English ○ Deutsch ○ Francaise ○ Italia

Time Setting

Incorrect time may cause problems in data logging. Adjust the inverter's time setting according to local time.

Main Screen (Press OK) -> Menu (Press ESC three times) -> Set-param (Press OK) -> Enter password (Press OK) -> Sys-param (Press OK , Press ESC) -> Time (Press OK)

Press OK to move the cursor and press ESC to change value. Press OK to confirm.	Time YY / MM /DD Date: **18/12/21** Time : 10:30:55

NOTE: If the inverter's internal clock is required to be highly accurate then a separate program may be required to synchronize the internal clock with a network time server. It is recommended to periodically adjust the internal clock for the accurate time.

Total Energy Deviation Adjustment

If the accumulative value **E-total** in the inverter is different from the value in the external metering device, adjust energy by setting **Energy-adj**.

Main Screen (Press OK) -> Menu (Press ESC three times) -> Set-param (Press OK) -> Enter Password (Press OK) -> Sys-param (Press OK , Press ESC twice) -> Energy-adj (Press OK)

Press OK to move the cursor and press ESC to change value. Press OK to confirm. The positive symbol “+” can be changed to the negative symbol “-”. The adjustment range is from -9999 to +9999 kWh. (Energy-adj value)= (Real measured value) - (E-tot reading value).	Energy -adj +0000kWh

Load Default (Factory Reset)

NOTE: All historical information will be permanently deleted. All parameters will return to their default values except the protective parameters and time, once the **Load default** operation is performed.

Main Screen (Press OK) -> Menu (Press ESC three times) -> Set-param (Press OK) -> Enter Password (Press OK) -> Sys-param (Press OK , Press ESC three times) -> Load Default (Press OK)

Press OK to confirm.	Sys-param Confirm resume setting?

Checking Firmware Version

Main Screen (Press OK) -> Menu (Press ESC three times) -> Set-param (Press OK) -> Enter Password (Press OK) -> Sys-param (Press OK , Press ESC four times) -> Firmware version (Press OK)

Inverter shows detailed firmware information, including LCD version and DSP version. The firmware version information is read-only.	**Firmware version** Device Type: CL36 SN: A1612160390 Ver: MDSP_CL36_V11_V1_A LCD_CL36_V11_V01_A_M

Running Parameter Setting

Main Screen of Run-param

Main Screen (Press OK) -> Menu (Press ESC three times) -> Set-param (Press OK) -> Enter Password (Press OK) -> Sys-param (Press OK , Press ESC) -> Run-param (Press OK)

On the **Run-param** screen, press ESC to select one item and press OK to enter the setting interface. For each item, Press OK to move the cursor and press ESC to set the appropriate value. Press OK to confirm.	Run- param P- Q param Time param LVRT param HVRT Param Derating param Iso param VOLT-WATT Enable **NOTE**: The Run-param screen varies depending on the selected country.

NOTE: The Run-param screen varies depending on the selected country. The following screens in the table are for reference only.

Table 5-3 Description of Running Parameters

Parameter		Description	Default	Range
P-Q param	**P-W limits**	Inverter active power limitation	100.0%	0 to 100%
	Rate limit	Set the active power change rate. When it is set to ON, the rate can be raised or lowered (decline).	OFF	OFF/ ON
	Power raise	When Rate limit is ON, set the active power rise rate.	100%/min	8 to 100%/min
	Power Decline	When Rate limit is ON, set the active power decline rate.	6000%/min	8 to 6000%/ min
	Fault slowup	Set the power rise rate when a fault is removed. When it is ON, the active power raise rate can be set.	ON	OFF/ ON
	Slowup rate	Set the active power raise rate.	100%/min	8 to 100%/min
	Save P-W Setting	Set whether to save the active power setting.	OFF	OFF/ ON
	Save Q-Var setting	Set whether to save the reactive power setting.	ON	[Pt] / [Qt] / [Off] / [Q(P)] / [Q(U)] / ON

Table 5-3 Description of Running Parameters

Parameter		Description	Default	Range
P-Q param	**Q-Var switch**	Set the reactive power regulation function.	OFF	OFF/ ON
	PF	Inverter output power factor	+1.000	-1.000 to -0.800/ +0.800 to +1.000
	Q-Var limits	Inverter reactive power limitation	0.0%	0 to +100%/ 0 to -100%
Time param	**Standby time**	Time from inverter Standby to Startup	20s	20 to 255s
	Recover time	Time from when inverter fault is removed to Standby	30s [IT: 300s]	0-900s
Derating param		Set the Derating param to OFF or ON. If it is ON, the inverter will operate with power derating when grid frequency exceeds the set value.	OFF	OFF/ ON

Table 5-3 Description of Running Parameters

Parameter		Description	Default	Range
Iso param	**ISO**	Set the ISO protection function to ON or OFF. When it is ON, the inverter will not connect to the grid when resistance to the ground is below the set value.	ON	OFF/ ON
	ISO pro value	Set the resistance to the ground.	33KΩ	-
LVRT param		Set the LVRT to OFF or ON. When it is ON, the inverter can keep the grid connection for a certain time from when grid fault occurs and provide reactive power for grid recovery.	OFF	OFF/ ON
MPPT scan		Set to either manual or interval scan.	Manual	Manual/ Interval
Altitude		Set to the inverter's operating altitude.	3000 m	up to 4000 m, derating at > 3000 m

Active/Reactive Power Parameters

Main Screen (Press OK) -> Menu (Press ESC three times) -> Set-param (Press OK) -> Enter Password (Press OK , Press ESC) -> Run-param (Press OK) -> P-Q param (Press OK)

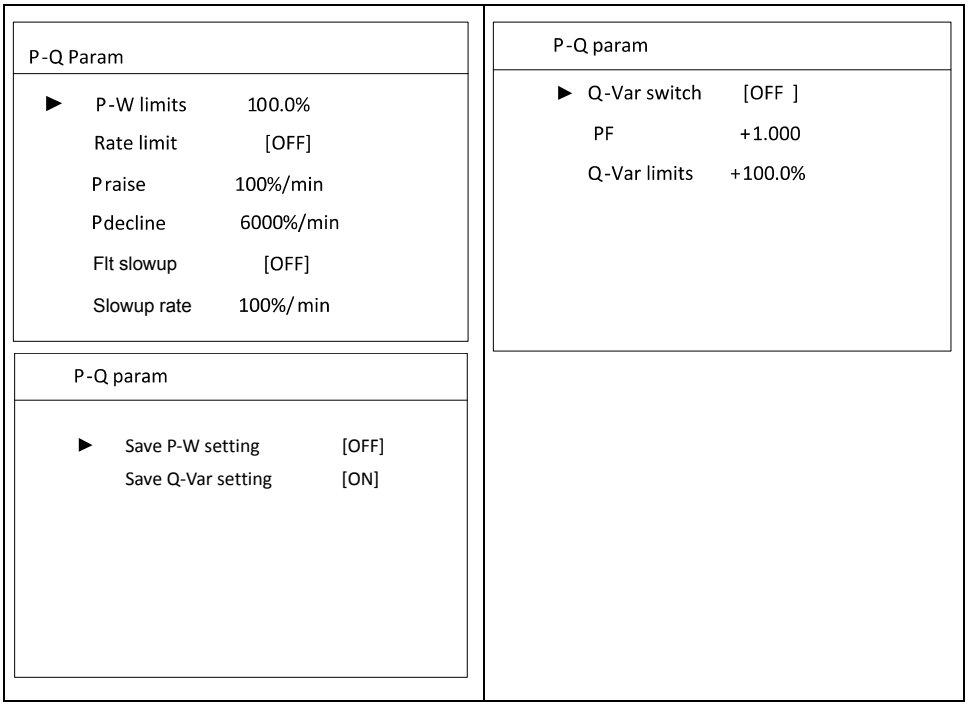

Reactive Power Regulation

Inverter provides reactive power regulation function. Use the **Q-Var switch** parameter to activate this function and select proper regulation mode.

Table 5-4 Explanation of Reactive Power Regulation Switch

Regulation Mode	Explanation
Pf	The reactive power can be regulated by the parameter PF (Power Factor).
Qt	The reactive power can be regulated by the parameter Q-Var limits (in %).
Off	The PF is limited to +1.000, and the “Q-Var limits” is limited to 0.0%.
Q(P)	The PF changes with the output power of the inverter.
Q(U)	The reactive power changes with the grid voltage.

Pf Mode

The reactive power can be regulated by the parameter **PF** on the **Run-param** screen.

Qt Mode

The reactive power can be regulated by the parameter **Q-Var limits** (in %) on the **Run-param** screen.

Off Mode

Reactive power cannot be regulated. The **PF** is limited to **+1.000**, and the **Q-Var** limit is limited to **0.0%**.

Q(P) Mode (when the country selection is not “IT”)

PF changes with the inverter output power.

If the country selection is not **IT** (Italy), after selecting **Q(P) Mode**, Press ESC to enter the **Run-param-Q(P)** submenu.

For each item, Press OK to move the cursor and press ESC to set the appropriate value.

Press OK to confirm.

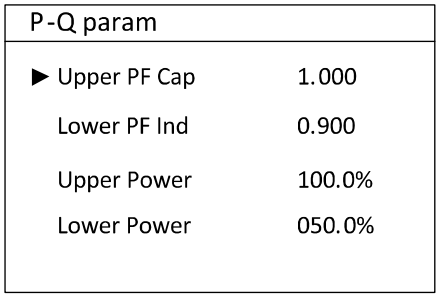

Table 5-5 Q(P) Mode Parameters Explanation

Parameter	Explanation	Default	Range
Upper PF Cap	Power factor of point P1 in the Q(P) mode curve	1	0.9 to 1
Lower PF Ind	Power factor of point P2 in the Q(P) mode curve	0.9	0.9 to 1
Upper Power[a]	Output power of point P2 in the Q(P) mode curve (in %)	100%	50% to 100%
Lower Power[a]	Output power of point P1 in the Q(P) mode curve (in %)	50%	0% to 50%

a.Lower Power < Upper Power

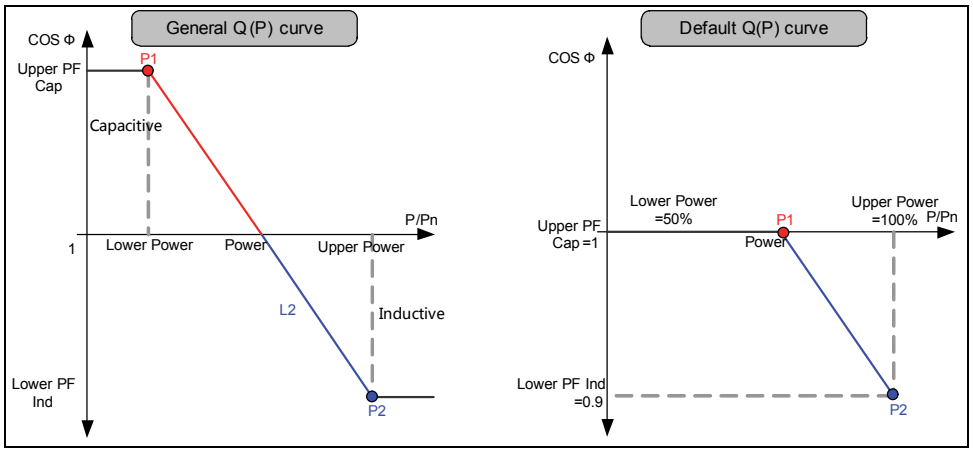

Figure 5-3 Reactive Power Regulation Curve in Q(P) Mode

Q(U) Mode (when the country selection is not “IT”)

The reactive power ratio changes with the grid voltage.

If the country selection is not **IT** (Italy), after selecting **Q(U) Mode**, Press ESC to enter the **Run-param-Q(U)** submenu.

For each item, Press OK to move the cursor and press ESC to set the appropriate value.

Press OK to confirm.

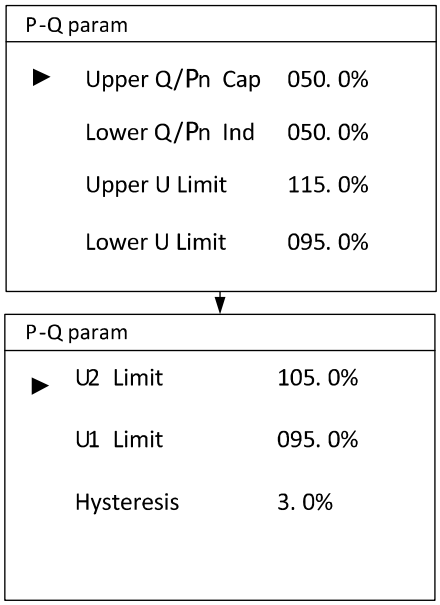

Table 5-6 Q(U) Mode Parameters Explanation

Parameter	Explanation	Default	Range
Upper Q/Sn Cap	Capacitive Q/Sn value of point P1 in the Q(U) mode curve	25%	0% to 50%
Lower Q/Sn Ind	Inductive Q/Sn value of point P4 in the Q(U) mode curve	25%	0% to 50%

Table 5-6 Q(U) Mode Parameters Explanation

Parameter	Explanation	Default	Range
Upper U Limit	Grid voltage limit (in %) of point P4 in the Q(U) mode curve	115%	110% to 115%
Lower U Limit	Grid voltage limit (in %) of point P1 in the Q(U) mode curve	80%	80% to 90%
U2 Limit[a]	Grid voltage limit (in %) of point P3 in the Q(U) mode curve	105%	100% to 105%
U1 Limit[a]	Grid voltage limit (in %) of point P2 in the Q(U) mode curve	95%	95% to 100%
Hysteresis[a]	Hysteresis voltage width (in %)	3%	0% to 5%

a.U1 Limit + Hysteresis < U2 Limit - Hysteresis

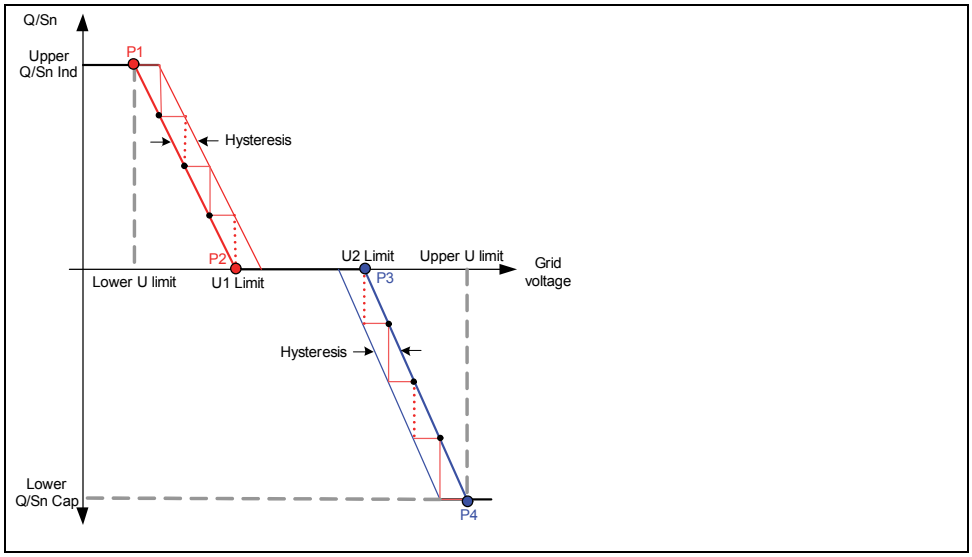

Figure 5-4 Reactive Power Regulation Curve in Q(U) Mode

Reactive Power Setting for Italy

If the **Country** selected is **IT** (Italy), several LCD Menus and operation methods are different especially **Run-param**.

Italy Q(P) Mode

Power factor changes with the output power of the inverter.

Select **Q(P) mode** and Press ESC to enter into the **Run-para-Q(P)** sub-menu.

Press ESC to move the cursor; Press OK to enter the editing mode, then the selected parameter will be shaded.

Press ESC to increase one-step value; Press OK to decrease one-step value.

Press OK to confirm the setting and exit from the editing mode.

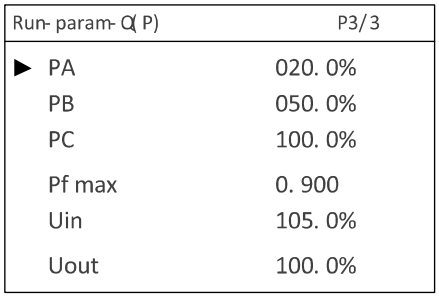

Table 5-7 Italy Q(P) Mode Parameters Explanation

Parameter	Explanation	Default	Range	Step
PA[a]	Active power at point A (in %)	20%	20 to 100%	1%
PB[a]	Active power at point B (in %)	50%	20 to 100%	1%
PC[a]	Active power at point C (in %)	100%	20 to 100%	1%
Pf max	Power factor at point C	0.9	0.9 to 1	0.01
Uin[b]	Enter Q(P) regulation mode when grid voltage is above Uin	105%	100 to 110%	1%
Uout[b]	Exit from the Q(P) regulation mode when grid voltage is below Uout	100%	90 to 100%	1%

a.PA < PB ≤ PC
b.Uin > Uout

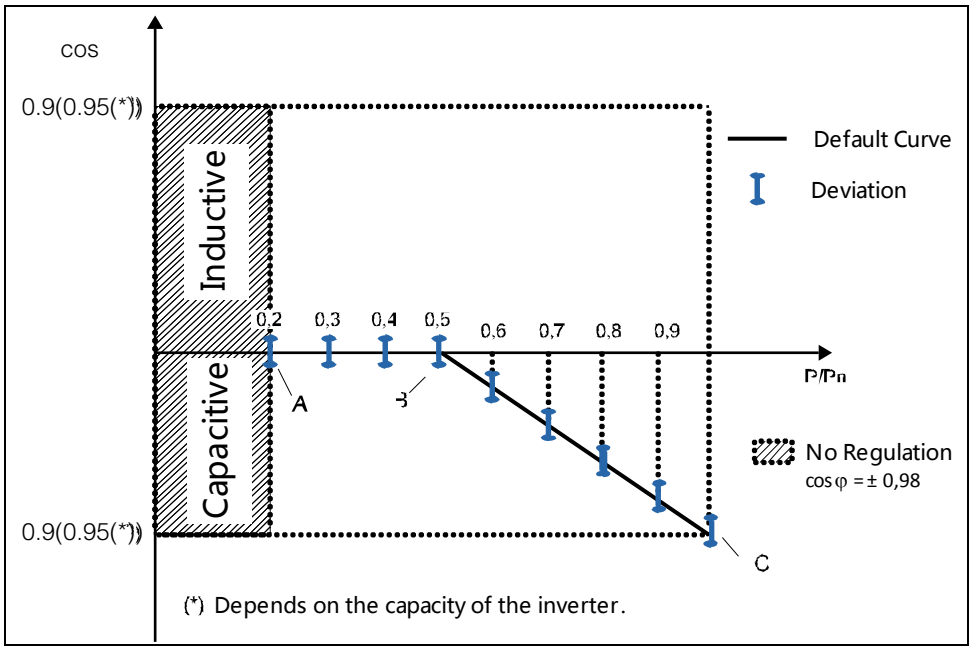

Figure 5-5 Reactive Power Regulation Curve in IT Q(P) Mode

Italy Q(U) Mode

The reactive power ratio changes with the grid voltage.

Select **Q(U) mode** and Press [ESC] to enter into the **Run-para-Q(U)** sub-menu.

Press [ESC] to move the cursor; Press [OK] to enter the editing mode, then the selected parameter will be shaded.

Press [ESC] to increase one-step value; Press [OK] to decrease one-step value.

Press [OK] to confirm the setting and exit from the editing mode.

P-Q param	P3/4
▶ V2i	090. 0%
V1i	092. 0%
V1s	108. 0%
V2s	110. 0%
Qmax	090. 0%

P-Q param	
▶ P in	020. 0%
Pout	009. 0%
Curve	[A]

Table 5-8 Italy Q(U) Mode Parameters Explanation

Parameter	Explanation	Default	Range	Step
V2i[a]	Grid voltage at point D (in %)	90%	90 to 110%	1%
V1i[a]	Grid voltage at point C (in %)	92%	90 to 110%	1%
V2s[a]	Grid voltage at point A (in %)	108%	90 to 110%	1%
V1s[a]	Grid voltage at point B (in %)	110%	90 to 110%	1%
Qmax	The max. ratio of reactive power (in %)	90%	50 to 100%	1%
Pin[b]	Enter the Q(U) regulation mode when power is above Pin	20%	20 to 100%	1%
Pout[b]	Exit from the Q(U) regulation mode when power is below Pout	9%	1 to 20%	1%
Curve	Curve type	A	A/B	-

a.V2i < V1i < V1s < V2s
b.Pin > Pout

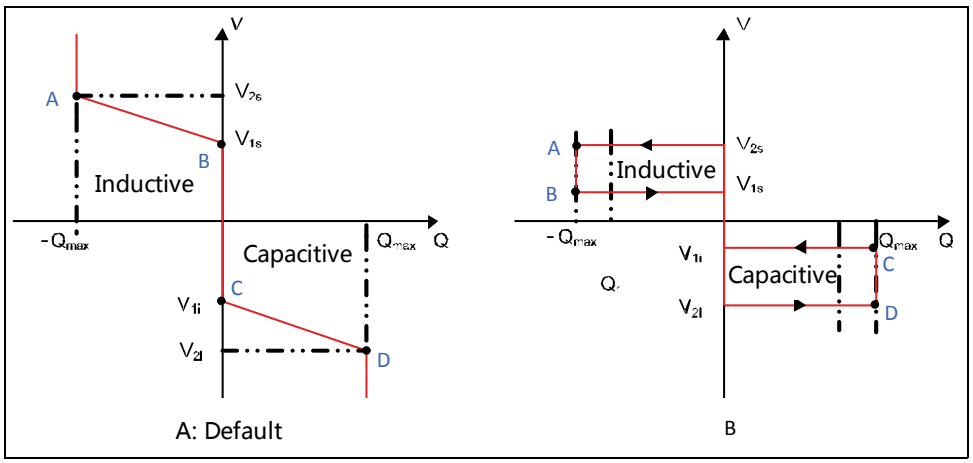

Figure 5-6 Reference Reactive Power Regulation Curve in IT Q(U) Mode

Save P/Q-set

On the Save P/Q-set screen, press ESC to move the arrow to one item. Press OK to move the cursor and Press ESC to set. Press OK to confirm. Select **ON** to save the values set after power down. Select **OFF** to restore default values ater power down.	P- Q param ▶ Save P-W setting [OFF] Save Q-Var setting [ON]

Time Parameters

Main Screen (Press OK) -> Menu (Press ESC three times) -> Set-param(Press OK) -> Enter password (Press OK , Press ESC) -> Run-param (Press OK , Press ESC twice) -> Time-param (Press OK)

Time -param

Standby time 020s

Recovery time 030s

Derating Parameters

Main Screen (Press OK) -> Menu (Press ESC three times) -> Set-param(Press OK) -> Enter password (Press OK , Press ESC) -> Run-param (Press OK , Press ESC three times) -> Derating param (Press OK)

Derating param	
▶ Fre-Derating	[ON/OFF]
F1	50.00 Hz
P1	100 %
F2	50.20 Hz
P2	100 %
F3	52.00 Hz
P3	100 %

ISO Parameters

Main Screen (Press OK) -> Menu (Press ESC three times) -> Set-param(Press OK) -> Enter password (Press OK , Press ESC) -> Run-param (Press OK four times) -> ISO param (Press OK)

ISO param	
▶ ISO	[ON/ OFF]
ISO pro value	33kΩ

LVRT Parameter

Main Screen (Press OK) -> Menu (Press ESC three times) -> Set-param(Press OK) -> Enter password (Press OK , Press ESC) -> Run-param (Press OK , Press ESC five times) -> LVRT param (Press OK)

LVRT param	
LVRT	[OFF]
LVRT kf	02
LVRT normal volt	195.5V
LVRT T 1	300 .00S
LVRT tolera volt	34.5V
LVRT T 2	0 .62S

HVRT Parameter

Main Screen (Press OK) -> Menu (Press ESC three times) -> Set-param(Press OK) -> Enter password (Press OK , Press ESC) -> Run-param (Press OK , Press ESC six times) -> HVRT param (Press OK)

HVRT param	
HVRT	[OFF]
HVRT kf	01.0
HVRT normal volt	110.0%
HVRT T 1	010.00S
H VRT tolera volt	130.0%
H VRT T 2	000.50S

Protection Parameter Setting

Protection parameters are designed for the threshold value that can trigger the protection function of the inverter.

Main Screen (Press [OK]) -> Menu (Press [ESC] three times) -> Set-param(Press [OK]) -> Enter password (Press [OK] , Press [ESC] twice) -> Pro-param (Press [OK])

Press [OK] to move cursor and Press [ESC] to enter the password.

NOTE: The user can only check the parameter in this screen. The default values of the protection parameters have been preset as per grid code of the corresponding country.

To set the protection parameter, use the password: 111111

Country Setting

To make the protection parameters setting convenient, the inverter provides built-in protection parameters for certain countries.

Press [ESC] to choose the country and press [OK] to confirm.

If the country selected is not in the list, choose **Other** and then input the protection parameters manually.

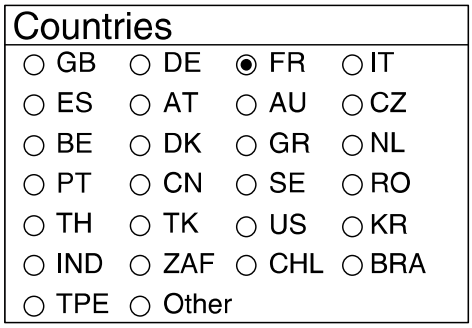

Table 5-9 Country Code Description

Country Code	Country	Language
GB	Great Britain	English
DE	Germany	English
FR	France	French
IT	Italy	English
ES	Spain	English
AT	Austria	English
AU	Australia	English
CZ	Czech	English
BE	Belgium	French
DK	Denmark	English

Table 5-9 Country Code Description

Country Code	Country	Language
GR	Greece	English
NL	Netherlands	English
PT	Portugal	English
CN	China	English
SE	Sweden	English
RO	Romania	English
TH	Thailand	English
TK	Turkey	English
US	North America	English
KR	Korea	English
IND	India	English
ZAF	South Africa	English
CHL	Chile	English
BRA	Brazil	English
TPE	Taiwan	English
Other	Country not listed	English

NOTE: When the country code selected is **TH**, **TK**, **DE**, **GR** or **Other**, the grid code specific to these country codes will appear on the LCD Display as shown below. Press ESC to choose grid code and press OK to confirm.

Grid Codes

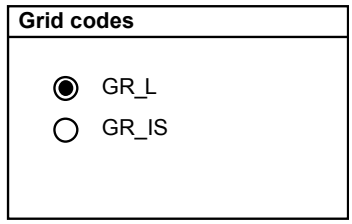

NOTE: When Country Code is **GR**.

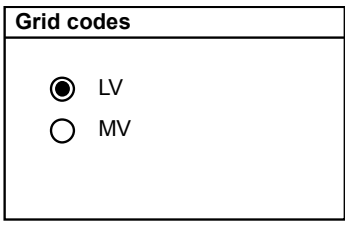

NOTE: When Country Code is **DE**.

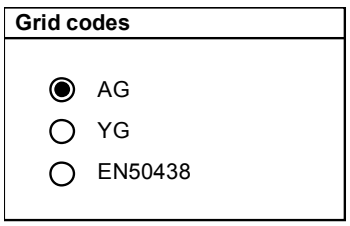

NOTE: When Country Code is **TK**.

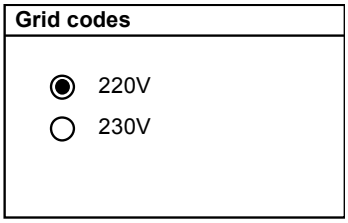

NOTE: When Country Code is **TH**.

Grid codes ◉ RPPs ○ NRS **NOTE**: When Country Code is **ZAF**.	**Grid codes** ◉ NO PS ○ PS **NOTE**: When Country Code is **CN**.
Grid codes ◉ 50Hz ○ 60Hz **NOTE**: When Country Code is **Other**.	
If the country code selected is not the five country codes above, there is no need to choose a grid code. The **Pro-Stage** screen will appear. Choose **Single-stage** or **Multi-stage**. Press ESC to choose a setting and press OK to confirm.	**Pro-Stage** ◉ Single-stage ○ Multi-stage

Single-stage Protection Parameter Setting

The following screen appears if **Single-stage** is selected. Press ESC to select a parameter, Press OK to move the cursor and Press ESC to set. Press OK to confirm.	Pro-param Single ► Vgrid-max 276. 0V Vgrid-min 184. 0V Fgrid-max 51. 50Hz Fgrid-min 49. 80Hz

Multi-stage Protection Parameter Setting

The following screens appear if **Multi-stage** is selected.

Press ESC to select a parameter,
Press OK to move the cursor and
Press ESC to set.

Press OK to confirm.

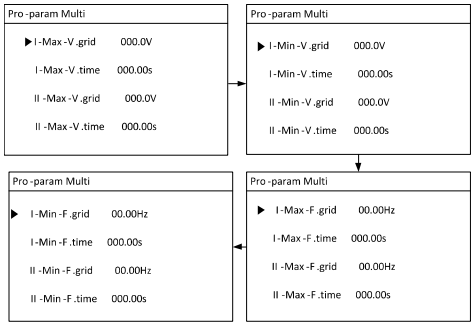

Table 5-10 Multi-stage Protection Parameters Explanation

Parameter	Explanation
Max-V. prot	Over-voltage protection
I-Max-V. grid	Stage I Grid over-voltage (U>)
I-Max-V. time	Stage I Grid over-voltage (U>) tripping time
II-Max-V. grid	Stage II Grid over-voltage (U>>)
II-Max-V. time	Stage II Grid over-voltage (U>>) tripping time
Min-V. prot	Under-voltage protection
I-Min-V. grid	Stage I Grid under-voltage (U<)
I-Min -V. time	Stage I Grid under-voltage (U<) tripping time
II-Min -V. grid	Stage II Grid under–voltage (U<<)
II-Min -V. time	Stage II Grid under–voltage (U<<) tripping time
Max-F. prot	Over-frequency protection
I-Max-F. grid	Stage I Grid over-frequency (f>)
I-Max-F. time	Stage I Grid over-frequency (f>) tripping time
II-Max-F. grid	Stage II Grid over-frequency (f>>)
II-Max-F. time	Stage II Grid over-frequency (f>>) tripping time
Min-F. prot	Under-frequency protection
I-Min-F. grid	Stage I Grid under-frequency (f<)
I-Min -F. time	Stage I Grid under-frequency (f<) tripping time
II-Min -F. grid	Stage II Grid under-frequency (f<<)
II-Min -F. time	Stage II Grid under-frequency (f<<) tripping time

Protection Recovery Setting

After setting the protection parameters, the inverter goes to the protection recovery screen.	Pro -recover ▶ Vmax -recover 240.0V Vm in-recover 220.0V F max-recover 50.10Hz F min-recover 49.50Hz

Table 5-11 Description of Protection Recovery Parameters

Parameter	Description
Vmax-recover	Max. protection recovery voltage
Vmin-recover	Min. protection recovery voltage
Fmax-recover	Max. protection recovery frequency
Fmin-recover	Min. protection recovery frequency

Protection Parameter Confirmation

The setting confirmation interface will appear once the protection parameters are entered. Press [OK] to confirm the parameter selection and press [ESC] to reset the protection parameters.	Setting confirmation Countries Other Pro-stage Single -stage Grid codes 50Hz Confirm above settings? **NOTE**: The Setting Confirmation screen varies depending on the selected country. In this example, the country selected is Other.

Communication Parameter Setting

Main Screen (Press OK) -> Menu (Press ESC three times) -> Set-param (Press OK) -> Enter Password (Press OK , Press ESC three times) -> Com-param (Press OK .

Press OK to move the cursor and Press ESC to set. Press OK to confirm.	Com -param ▶ Modbus param Uart param
Device address range: 1-247.	Modbus param ▶ Addr 001
Baud rate can be set to 9600 bps or 19200 bps. Parity can be set to NO, ODD or EVEN. Stop bit can be set to 1 or 2.	Uart param ▶ Baud [9600] Parity [NO] Stop bit [1]

Advanced Setting Parameter Setting

Main Screen (Press OK) -> Menu (Press ESC three times) -> Set-param (Press OK) -> Enter Password (Press OK , Press ESC four times) -> Advanced Settings (Press OK .

Press OK to move the cursor and Press ESC to set.	**Advanced Settings** **PVS Detect** **10min Max-V** **Grid Unbalance**
PVS detect setting	**PVS Detect** **ON** **OFF** **Reset** **Set-param**
	PVS Detect ▶ **Low Current** **50.0%**

10-minute Max-V setting	**10min Max-V** ► **10min Max-V** **[OFF]** **Pro-value** **253.0V** **Rec-value** **252.0V**
Grid unbalance setting	**Grid unbalance** ► **Grid Unbalance** **[OFF]** **Amplitude** **20%** **Pro-time** **05.00s**

6 Troubleshooting

Chapter 6 contains information about:

- Troubleshooting
- Maintenance

Troubleshooting

DANGER

HAZARD OF ELECTRIC SHOCK, EXPLOSION, OR ARC FLASH

- Apply appropriate personal protective equipment (PPE) and follow safe electrical work practices.
- This equipment must only be installed and serviced by qualified electrical personnel.
- Never energize the inverter with the covers removed.
- Do not open a fuse under load. The fuse must be de-energized from all sources before servicing.
- The inverter is energized from multiple sources. Before removing covers identify all source, de-energize, lock-out, and tag-out and wait 10 minutes.
- Always use a properly rated voltage sensing device to confirm all circuits are de-energized.
- Replace all devices and covers before turning on power to this equipment.
- The DC conductors of this photovoltaic system are ungrounded and may be energized.

Failure to follow these instructions will result in death or serious injury.

Access to live parts shall be limited to suitably qualified electrical personnel.

NOTE: Some of the solutions presented in the troubleshooting section may require you to open the CL36 enclosure temporarily while still receiving power from an AC source. Follow the **DANGER** safety message above prior to opening the CL36 enclosure.

LED Indicator

Problem	Symptom	Check...	Solution
The CL36 appears to be non-operational.	LED indicators and LCD screen are Off.	... the downstream AC circuit breaker to see that it is closed (turned On). ... the AC wiring connections on the AC circuit breaker and the inverter terminals. ... the upstream DC circuit breaker to see that it is closed (turned On). ... the DC switch on the inverter is turned to ON position. ... the polarity of the PV arrays and that they match the cables leading to the inverter terminals.	Perform the "Lock-Out Tag-Out (LOTO) Procedure" on page xi. Revisit the instructions and perform "Cabling and Wiring" on page 3–3 and "Commissioning Procedure" on page 4–2 again. See NOTE on page 6–3.
The CL36 is energized but one or more of the LED indicators are showing symptoms.	**RUN** LED indicator is Off	... the AC wiring connections on the AC circuit breaker and the inverter terminals. ... whether the DC input voltage exceeds the startup voltage of the inverter.	Perform the "Lock-Out Tag-Out (LOTO) Procedure" on page xi. Revisit the instructions and perform "AC Side Cable Connection" on page 3–6 and "PV Array Connection" on page 3–14 again. See NOTE on page 6–3.
	Alert LED indicator is On	... the LCD screen for a message.	See "LCD Screen" on page 6–4 for a solution. If the problem persists, see NOTE on page 6–3.
	RUN LED indicator is flashing	... the LCD screen for a warning message.	See "LCD Screen" on page 6–4 for a solution. See NOTE on page 6–3.

NOTE: If the problem persists, contact technical support at: http://solar.schneider-electric.com/tech-support.

LCD Screen

When a ground fault (or event) is detected, the LCD screen displays the message on the LCD screen. Press ESC to view multiple screens.

Event Code	Description	Solution
002	The grid voltage exceeds the inverter's allowable range. Protection time and protection thresholds depend on the country's requirements.	Measure the grid voltage. Follow the DANGER message at the beginning of this chapter. If the grid voltage exceeds the inverter's allowable range, contact the utility company for suggestions.
003	Grid transient voltage exceeds the allowable range.	This is a short term event caused by the grid. Wait for the inverter to recover automatically. See NOTE on page 6–9.
004	The grid voltage is below the inverter's allowable lower limit. Protection time and protection thresholds depend on the country's requirements.	Measure the grid voltage. Follow the DANGER message at the beginning of this chapter. If the grid voltage exceeds the inverter's allowable range, contact the utility company for suggestions.
005	The grid voltage is too low.	This is a short term event caused by the grid. Wait for the inverter to recover automatically. See NOTE on page 6–9.
006	The AC output current exceeds the inverter's protection limit.	Wait for the inverter to recover automatically when the AC output current falls below the protection limit. See NOTE on page 6–9.
007	Transient AC over current	Wait for the inverter to recover automatically.
008	The grid frequency exceeds the inverter's allowable upper limit.	Measure the grid frequency. Follow the DANGER message at the beginning of this chapter. If the grid frequency exceeds the inverter's allowable range, contact the utility company for suggestions.
009	The grid frequency exceeds the inverter's allowable lower limit.	

Event Code	Description	Solution
010	Islanding	Check whether the AC circuit breaker is connected. Check whether AC cables are all properly connected. Check whether the grid is in service. See NOTE on page 6–9.
011	The DC component of the AC current exceeds the inverter's limit.	Wait for the inverter to recover automatically. See NOTE on page 6–9.
012	Current leakage is detected.	Check for signs at the PV array site for a possible ground fault. See NOTE on page 6–9.
013	A grid condition event is detected.	If the grid voltage exceeds the inverter's allowable range, contact the utility company for suggestions. If the problem persists but the grid voltage is within the inverter's allowable range, contact technical support at: http://solar.schneider-electric.com/tech-support
014	The average grid voltage keeps exceeding the allowable range for over 10 minutes.	Wait for the inverter to recover automatically. See NOTE on page 6–9.
015	Grid impedance exceeds inverter's limit.	Check that the AC cables used are specified correctly according to local electrical regulations. Wait for the inverter to recover automatically. See NOTE on page 6–9.
016	AC output overload	Wait for the inverter to recover automatically. See NOTE on page 6–9.
017	Grid voltage imbalance	Wait for the inverter to recover automatically. Test the grid voltage to confirm the imbalance. See NOTE on page 6–9.

Event Code	Description	Solution
019	The transient bus voltage is high.	Wait for the inverter to recover automatically. See NOTE on page 6–9.
020	The bus voltage is high.	Wait for the inverter to recover automatically. See NOTE on page 6–9.
021	PV1 (or PV3) input over current	Check the PV configuration and connection.
022	PV2 input over current is detected.	Check the layout and the wiring of the PV2 input.
023	PV configuration mode has changed during normal operation.	Check the PV configuration. Restart the inverter.
024	Neutral point deviation is detected.	Inverter will recover automatically when the deviation falls within the allowable voltage range. Test the neutral for proper voltage and connection. Check for PV array insulation or water ingression or potential ground fault. See NOTE on page 6–9.
025	Transient unbalance of voltage neutral point	Wait for the inverter to recover automatically when the deviation falls within the allowable range. See NOTE on page 6–9.
026	Bus voltage is fluctuating.	Wait for the inverter to recover automatically. See NOTE on page 6–9.
036	Module temperature is too high.	Verify that the AC output power is not continually exceeding nominal power. If it is, reduce the load and do not exceed nominal power requirements.
037	Ambient temperature is too high.	Check the functionality of the fans. Replace any broken fan if necessary. Clean air outlet grills. See NOTE on page 6–9.

Event Code	Description	Solution
038	An event is detected in the relay.	Wait for the inverter to recover automatically. See NOTE on page 6–9.
039	Inverter insulation resistance fault (ISO-flt)	Check whether the ISO-flt level value is set properly on the display. Test for insulation in the PV array wiring. Wait for the inverter to recover automatically. See NOTE on page 6–9.
040	IGBT saturation event	Wait for the inverter to recover automatically. Check the PV array for insulation damage, moisture ingress in connectors or other potential ground faults. See NOTE on page 6–9.
041	Current leakage sampling channel event	Wait for the inverter to recover automatically. See NOTE on page 6–9.
042	Current imbalance	Wait for the inverter to recover automatically. See NOTE on page 6–9.
043	The ambient temperature falls below -25 °C (-13 °F)	Stop operating the inverter and disconnect it from all power sources. Wait for the ambient temperature to rise within the allowable range and then restart the inverter.
044	DC/AC inversion circuit event	Wait for the inverter to recover automatically. See NOTE on page 6–9.
047	PV configuration mode set on the display does not match the design.	Disconnect the inverter from all power sources. See “PV Array Connection” on page 14 to reconnect the PV strings and reselect PV configuration mode.

Event Code	Description	Solution
048	Phase-R current sampling channel event	Wait for the inverter to recover automatically. See NOTE on page 6–9.
049	Phase-S current sampling channel event	
050	Phase-T current sampling channel event	
051	Hardware Over-voltage/ Over-current protection	Wait for the inverter to recover automatically. See NOTE on page 6–9.
070	Fan event	Stop operating the inverter, disconnect from all power sources. Remove and replace the broken fan. Contact technical support at: http://solar.schneider-electric.com/tech-support.
071	AC side SPD event	Replace the SPD. For DC SPD, see “Replacing an Expended DC SPD” on page 6–14. Remove and replace the expended SPD.
072	DC side SPD event	
073	PV string fuse has blown	Stop operating the inverter, disconnect from all power sources. Remove and replace the blown fuse. See “Replacing the Fuse” on page 6–13.
074	LCD communication event	An event has occurred in the internal communication of the inverter. However, the inverter continues feeding into the grid. See NOTE on page 6–9.
075	Solar irradiation is not sufficient for inverter operation	Wait for sufficient sunlight. If this event recurs when irradiation is sufficient, check the PV system design and adjust the connection of PV inputs.
076	PV overload condition	Check the PV system design and adjust the connection of PV inputs.

Event Code	Description	Solution
078 079 080	PV1 power event warning PV2 power event warning PV3 power event warning	Check the PV input terminals for loose connections. Tighten the connections according to torque specifications found in “PV Array Connection” on page 3–14. See NOTE on page 6–9.
532–547	PV reverse polarity warning	Check the PV input terminals and cables for reverse polarity connections. Perform the instructions on “PV Array Connection” on page 3–14. See NOTE on page 6–9.
548–563	PV output current event	Check the PV array site for loose connections. Check that the PV cells are clean and not covered by debris. Check to ensure wires are properly seated and locked in the MC4 connector housings at the bottom of the inverter. If you have recently reconfigured the PV array, perform a PVS Detect reset to set new trip levels. See page 5–37. See NOTE on page 6–9.

NOTE: If the problem persists, contact technical support at: http://solar.schneider-electric.com/tech-support.

Maintenance

Routine Maintenance

Component	Maintenance	Frequency
CL36 unit	Check the temperature and dust accumulation on the inverter. Clear the inverter enclosure of any leaves, sand, and dust build up and other debris, if necessary. Check if the air inlet and outlet are clear of any debris. Clean the air inlet and outlet, if necessary.	Every six months to a year (depending on air quality in the local area)
Fans	Check whether there are visible cracks on the fan blades. Check for unusual noise when the fan is turning. Clean or replace the fans if necessary (see “Fan Maintenance” on page 6–11).	Once a year
SPD	Check the fuse and DC SPD. Replace the fuse (see “Replacing the Fuse” on page 6–13) and DC SPD whenever necessary.	Every six months
Firmware	Compare the firmware version on the product page with the firmware version installed on the inverter and upgrade, if necessary. To upgrade, see the *CL36 Conext EasyConfig Tool Owner’s Guide* for instructions.	Every six months

Maintenance Instructions

Fan Maintenance

Fans inside the PV Inverter are used to cool the inverter during operation. If the fans do not operate normally, the inverter may not be cooled down and operational efficiency may decrease. Therefore, it is necessary to maintain the fans and keep them clean and free of debris. If necessary, replace broken fans. Contact your local Schneider Electric Solar Sales Representative at: http://solar.schneider-electric.com.

DANGER

HAZARD OF ELECTRIC SHOCK, EXPLOSION, OR ARC FLASH

- Apply appropriate personal protective equipment (PPE) and follow safe electrical work practices.
- This equipment must only be installed and serviced by qualified electrical personnel.
- Never energize the inverter with the covers removed.
- Do not open a fuse under load. The fuse must be de-energized from all sources before servicing.
- The inverter is energized from multiple sources. Before removing covers identify all source, de-energize, lock-out, and tag-out and wait 10 minutes. See “Lock-Out Tag-Out (LOTO) Procedure” on page xi.
- Always use a properly rated voltage sensing device to confirm all circuits are de-energized.
- Replace all devices and covers before turning on power to this equipment.
- The DC conductors of this photovoltaic system are ungrounded and may be energized.

Failure to follow these instructions will result in death or serious injury.

1. Perform the steps in “Disconnecting the CL36” on page 7–2.
2. Remove the screws holding the fan assembly to the enclosure as shown.

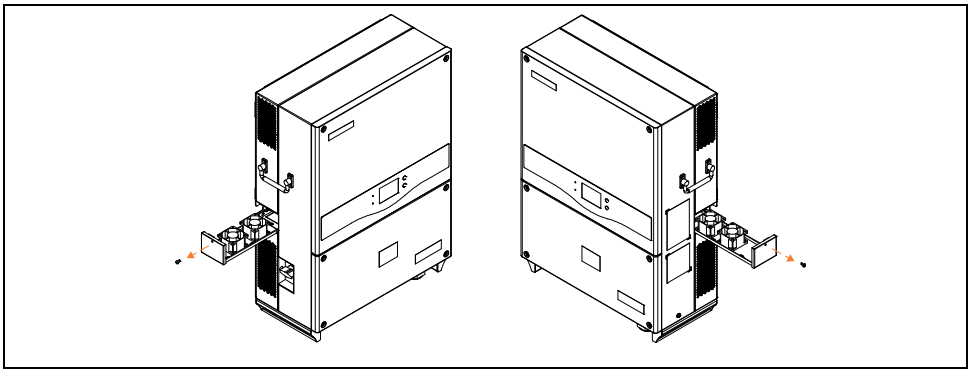

When the fan assembly is removed the fans’ power wires will also get pulled out of the enclosure.

3. Press on the locking button on the fans' power connectors and pull the connectors outward from each other.

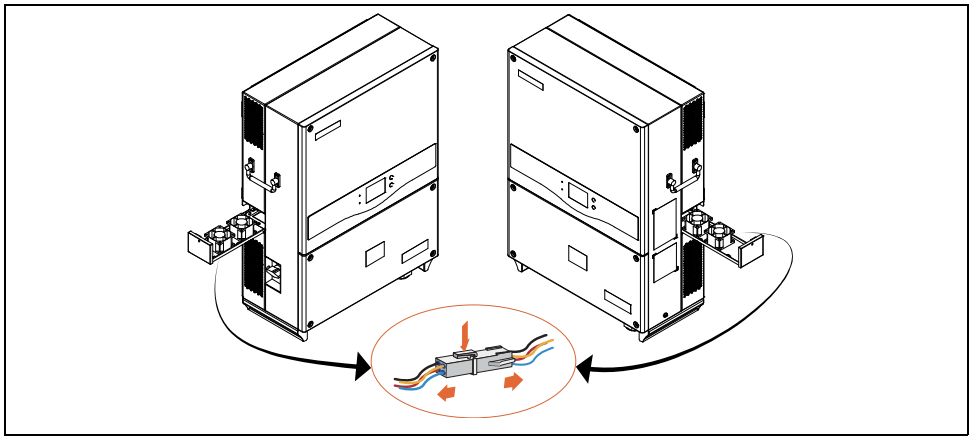

4. Remove the fans from the inverter.
5. Clean the fan with soft brush or vacuum cleaner (or replace the broken fans).

NOTE: Do not use pressurized air (compressed air) to clean the fan. This will force debris inside the enclosure.

6. Reassemble the fans (including plugging in the power connectors) back into the inverter.
7. Perform "Commissioning Procedure" on page 4–2.

Replacing the Fuse

To replace the blown fuse due to an over current condition:

1. Open the AC circuit breaker (turn it OFF) and perform the “Lock-Out Tag-Out (LOTO) Procedure” on page xi, if not yet done.
2. Open the upstream DC disconnect (turn it OFF).
3. Turn the DC switch of the PV Inverter to OFF position.
4. Pull the DC cable from the MC4 connector.
   Avoid using standard pliers. Use the proper MC4 tool to disconnect the DC cable from the terminals.
5. Wait about ten minutes until the capacitors inside the inverter have discharged.
6. Remove the four screws on the front cover of the lower wiring box then put away the front cover. For torque, see “Torque Values” on page 2–11.

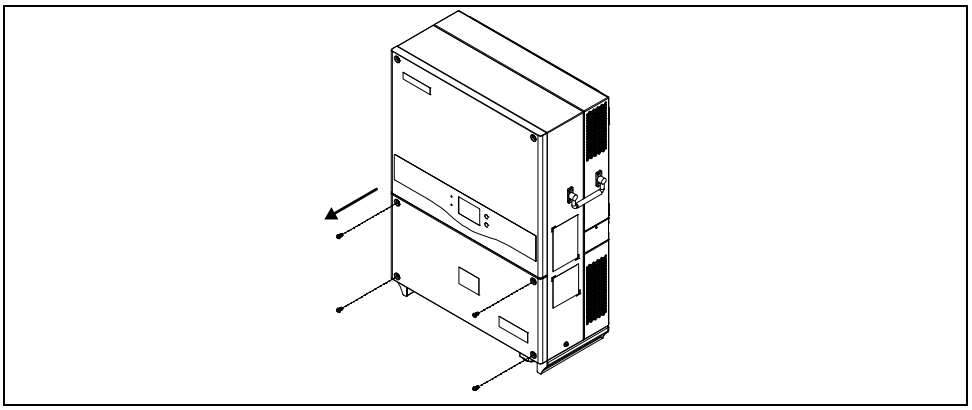

7. Measure the AC voltage to ground at the AC terminal to confirm that the AC output voltage of the inverter at the AC circuit breaker is zero.
8. Measure the DC voltage at the DC terminal to confirm that it is zero.
9. Identify the blown fuse from the fuse holder using a multimeter.
10. Remove the blown fuse using a suitable fuse holder remover.

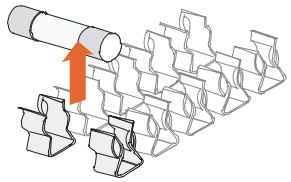

DC Fuse
HOLLYLAND (CHINA) ELECTRONICS TECHNOLOGY CORPORATION LIMITED: 10gPV15U11, 1100V, 15A, 30KA surge, 10X38mm

11. Insert the new fuse into the fuse holder. The replacement fuse has to be of the same type and rating. If not, procure the correct fuse from http://www.hollyfuse.com.
12. Reassemble the inverter’s front cover. For torque, see “Torque Values” on page 2–11.
13. Perform “Commissioning Procedure” on page 4–2.

Replacing an Expended DC SPD

To replace the DC SPD (surge protection device):

1. Open the AC circuit breaker (turn it OFF) and perform the “Lock-Out Tag-Out (LOTO) Procedure” on page xi, if not yet done.
2. Open the upstream DC disconnect (turn it OFF).
3. Turn the DC switch of the PV Inverter to OFF position.
4. Pull the DC cable from the MC4 connector.
   Avoid using standard pliers. Use the proper MC4 tool to disconnect the DC cable from the terminals.
5. Wait about ten minutes until the capacitors inside the inverter have discharged.
6. Remove the four screws on the front cover of the lower wiring box then put away the front cover. For torque, see “Torque Values” on page 2–11.
7. Measure the AC voltage to ground at the AC terminal to confirm that the AC output voltage of the inverter at the AC circuit breaker is zero.
8. Measure the DC voltage at the DC terminal to confirm that it is zero.
9. Identify the expended DC SPD cartridge by the red indicator (see picture below).
10. Remove the expended DC SPD cartridge by pulling the cartridge out of its housing using your index finger and thumb to grab the top and bottom edges.

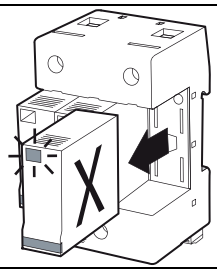

DC SPD Manufacturer Part Number
DEHN DG MOD PV 500 CN

11. Insert the new SPD into the housing in the same but opposite direction as step 10. The replacement SPD has to be of the same type and rating. If not, procure the correct SPD.
12. Reassemble the inverter’s front cover. For torque, see “Torque Values” on page 2–11.
13. Perform “Commissioning Procedure” on page 4–2.

Cleaning the Air Inlet and Outlet

Heat is generated in the process of running the inverter. The inverter adopts a controlled forced-air cooling method.

In order to maintain good ventilation, make sure that the air inlet and outlet grates are not blocked and they are clear of any debris.

Clean the air inlet and outlet grates with a soft brush or a vacuum cleaner, if necessary.

NOTE: Do not use pressurized air (compressed air) to clean the grates. This will force debris inside the enclosure.

•THIS PAGE INTENTIONALLY BLANK•

7 Disconnecting, Dismantling, and Disposing the CL36

Chapter 7 contains information about:

- Disconnecting the CL36
- Dismantling the CL36
- Disposing the CL36

Disconnecting the CL36

For maintenance work or any service work, the CL36 PV Inverter must be disconnected from all power sources.

DANGER

ELECTRIC SHOCK, EXPLOSION, OR ARC FLASH HAZARD

- Apply appropriate personal protective equipment (PPE) and follow safe electrical work practices.
- This equipment must only be installed and serviced by qualified electrical personnel. Access to live parts shall be limited to suitably qualified electrical personnel. See installation instructions before connecting to the supply.
- Never operate energized with the CL36 enclosure opened.
- Before opening the inverter's enclosure identify the power source, de-energize, lock-out, and tag-out and wait ten minutes for circuits to discharge. See "Lock-Out Tag-Out (LOTO) Procedure" on page xi.
- Always use a properly rated voltage sensing device to confirm all circuits are de-energized.

Failure to follow these instructions will result in death or serious injury.

To disconnect the inverter from DC and AC power sources:

NOTE: Follow steps 1 and 2 in sequence exactly.

1. Open the AC circuit breaker (turn it OFF) and perform the "Lock-Out Tag-Out (LOTO) Procedure" on page xi, if not yet done.
2. Open the upstream DC disconnect device (turn it OFF).
3. Turn the DC switch of the PV Inverter to OFF position.
4. Pull all the DC cables from the MC4 connectors.
   Avoid using standard pliers. Use the proper MC4 tool to disconnect the DC cables from the terminals.
5. Wait about ten minutes until the capacitors inside the inverter have discharged.
6. Remove the four screws on the front cover of the lower wiring box then put away the front cover.

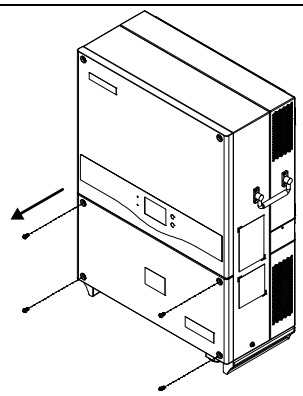

7. Measure the AC voltage to ground at the AC terminal to confirm that the AC output voltage of the inverter at the AC circuit breaker is zero.
8. Remove the AC cables from the terminals.
9. Remove the DC cables from the terminals.

Dismantling the CL36

To dismantle the PV Inverter:

1. Reverse the steps found in “RS-485 Communication Connection” on page 3–25.
2. Reverse the steps found in “AC Cable Connection” on page 3–11, “DC Cable Connection” on page 3–16, and “Cable Connection” on page 3–21.
3. Reverse the steps found in “Install and Mount the CL36” starting on page 2–8.
4. Store the PV Inverter according to the guidelines below.
   - Inverter must be packed inside its original carton with the desiccant bags inside.
   - Store the inverter with its front panel facing up. The carton should lay flat and parallel to the ground.
   - Seal the carton with standard packaging tape.
   - Store the inverter in a dry and clean place to protect it against dust and moisture. See notice below.
   - Relative temperature: -40 to 70 °C
     Relative humidity: 0 to 100%.
   - Do not stack more than two inverters (carton) together.
   - Keep the inverter away from chemically corrosive materials.
   - Periodically check for any visible damages to the carton and inspect the inverter right away if the carton shows signs of penetration during the storage period. Replace the carton, if necessary.

NOTE: A thorough and professional inspection may be required before re-installing the inverter after more than six months in storage. Contact an authorized installer.

Disposing the CL36

The end user of the CL36 is responsible for the proper disposal of the PV Inverter.

As a general rule, do not dispose of or discard the CL36 along with ordinary household garbage or organic waste.

Always follow regional, national, and/or local waste disposal directives concerning disposing, discarding, or recycling of equipment containing electronic and electrical components such as the CL36.

•THIS PAGE INTENTIONALLY BLANK•

8 Specifications

Chapter 8 contains information about:

- DC Side - Technical Specification
- AC Side - Technical Specification
- General Specifications
- User Interface and Communications
- Regulatory Approvals

Product Specifications

DC Side	Conext CL36
DC Max. input voltage	1100 V
Full power MPPT voltage range (PF=1) (VDC)	500 - 860 V
Operating voltage range at nominal AC voltage	200 - 1000 V
Start voltage (VDC)	250 V
Max. array short circuit current (ADC)	96A(36A/36A/24A)
Max. array input current (ADC)	88A(33A/33A/22A)
Number of MPPT / Max. Number of inputs per MPPT	3 MPPT (3+3+2)
DC connectors / Max. current per input (ADC)	MC4 / 12 A (mating part included)
DC fuse	8 pairs (+/-), string monitoring included
DC switch / DC SPD	Yes / Type II DIN rail surge arrester

AC Side	Conext CL36
Max. AC output power (PF=1, nominal AC voltage)	36 kW
Max. output fault current (AC) and duration	--
Max. Apparent power (nominal AC voltage)	36 kVA
AC nominal output voltage (VAC) / AC Voltage range A(VAC)	400V (L-L) 3/N/PE or 3/PE 310V (L-L) to 480V (L-L)
Frequency / Frequency range	50 Hz & 60 Hz / 45 to 55 Hz & 55 to 65 Hz
Max. Output current (AAC)	53.5 A

AC Side	Conext CL36
Power factor	0.8 lead to 0.8 lag adjustable
THD at nominal power	< 3%
AC connection	Screw clamp terminal, CU type cable compatible
AC disconnect	Not included
AC connection	4 wire grounded WYE or ungrounded DELTA

General Specifications	Conext CL36
Peak efficiency Euro efficiency	98.5% 98.3%
Power consumption at night time	< 2 W
Enclosure rating	IP 65 (electronics)
Protective class	I
OVC	II (mains), II (PV)
Inverter gross weight (including box)	60 kg
Inverter box dimensions (L x W x H)	924 x 674 x 398 mm
Inverter net weight	48 kg
Inverter dimensions (L x W x H)	740 x 566 x 268 mm
Ambient air temperature for operation	-25 to 60°C, derating > 45°C
Max. Operating altitude	4000 m, derating > 3000 m
Relative temperature (in storage)	-40 to 70 °C
Relative humidity (%)	0 to 100% condensing
Audible noise	65 dBA ±3 dBA
Inverter mounting	Vertical wall mounting

User Interface and Communications	Conext CL36
User interface	Graphic LCD display, 2 LEDs, 2 buttons and EasyConfig Tool
Communication interface	RS485-Modbus

Regulatory Approvals	Conext CL36
Certifications	VDE0126-1-1, EN62109-1, EN62109-2, G59/3, VDE-AR-N 4105, Emissions: IEC/EN 61000-6-3 Immunity: IEC/EN 61000-6-2, UTE C15-712-1, IEC 61683, EN 50530, IEC 61727, IEC 62116 AS 3100*, AS 4777.1* and AS4777.2*, CEI 021*
Environmental	RoHS, REACH and 4K4H

*pending

Schneider Electric

http://solar.schneider-electric.com

As standards, specifications, and designs change from time to time, please ask for confirmation of the information given in this publication.

© 2019 Schneider Electric. All rights reserved.

975-0811-01-01 Rev A

Printed in: